mecc alte

POWER FROM WITHIN

MxK^{S} DIGITAL REGULATORS

CANBus

TECNICAL GUIDE

DIGITAL REGULATOR MxK

LIST OF CONTENTS

INTRODUCTION

This document aims at describing the CANBus communication functionalities and requirements of the MeccAlte Digital Regulators **M2K^{S}**, **M3K^{S}** and **M3K^{S-HD}** (hereinafter generically referred to as **MxK^{S}**) controlling synchronous alternators.

In general, the information given here applies to all the CANBus equipped digital regulators; with parts that refer to specific devices, the relative device is indicated in the heading.

These functionalities and requirements are based on the SAE J1939 CAN protocol, more specifically on the HLPs which allow the description of the parameters which are used for monitoring and controlling the **MxK^{S}** Digital Regulators.

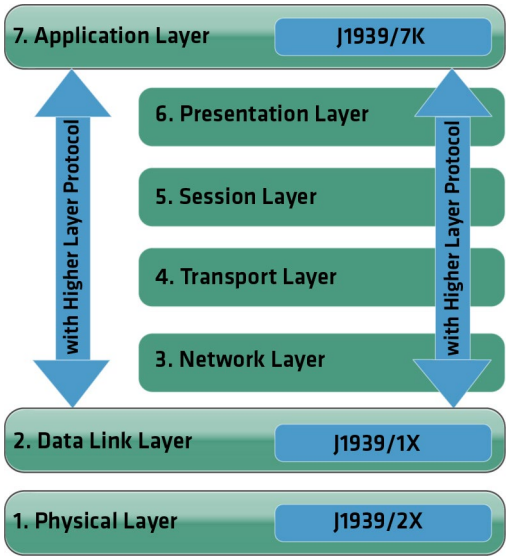

Fig. 1: SAE J1939 protocol stack

	The information quoted in this manual may be changed without notice. This revision cancels and replaces all previous ones. A revision summary is present at the end of the document

	To avoid damaging things and/or harming people, only qualified technicians who are fully aware of and understand the information given in this manual and in that indicated at §1.2 should carry out the procedures described in these documents; while the device is being powered by the fast-on main connector, the voltage can be deadly to the operator.

	Unless otherwise specified, all connections must be made or removed when the device is not powered.

1 REFERENCES

The following documents, when cross-referenced in the subsequent sections, are cited by the notation [Ref. §1.1].

1.1 Standard

- **SAE J1939**
  Recommended Practice for a Serial Control and Communications Vehicle Network
- **SAE J1939-11**
  Physical Layer - 250k bits/s, Twisted Shielded Pair
- **SAE J1939-13**
  Off-Board Diagnostic Connector
- **SAE J1939-15**
  Reduced Physical Layer, 250K bits/sec, Un-Shielded Twisted Pair (UTP)
- **SAE J1939-21**
  Data Link Layer
- **SAE J1939-73**
  Application Layer - Diagnostics
- **SAE J1939-75**
  Application Layer - Generator Sets and Industrial
- **ISO 11898-1**
  Data link layer and physical signaling

1.2 Internal documents

- **MxK DIGITAL REGULATORS**
  Technical Guide

1.3 Terminology

TERM	DEFINITION
Cyclic Redundancy Check	Algorithm used to verify the data integrity of a byte stream
Diagnostic Message 1	Periodical message which reports the active failure codes
Higher Layers Protocol	They are the layers above the Data Link layer in the SAE J1939 Protocol.
Parameter Group Number	Index, embedded in the 29-bit identifier of message, identifying the message function and associated data.
Suspect Parameter Number	The numeric code used to identify a parameter within Diagnostic Messages (e.g. DM1 message)

1.4 Acronyms

ACRONYM	DEFINITION
APO	M3KS-HD Active Protection Output
AWL	Amber Warning Lamp
BAM	Broadcast Announce Message
CAN	Control Area Network
CM	Connection Management
CRC	Cyclic Redundancy Check
DM1	Diagnostic Message 1
DTC	Diagnostic Trouble Code
ECU	Engine Control Unit
FMI	Failure Mode Indicator
HDR	M3KS-HD High Dynamic Response
HLP	Higher Layers Protocol
ISO	International Organization for Standardization
MCU	MicroController Unit
MIL	Malfunction Indicator Lamp
OBD	On Board Diagnostic
PDU	Protocol Data Unit
PGN	Parameter Group Number
PID	Parameter Identifier
PL	Protect Lamp
RSL	Red Stop Lamp
SAE	Society of Automotive Engineers
SPN	Suspect Parameter Number
USB	Universal Serial Bus

2. HARDWARE

2.1 Hardware specifications

CANBus connection takes place by **MxK^S** connector named CAN (figg. 2, 3 or 4)
When properly supplied on both sides, during normal operation, the transceiver transmits and receives data via bus, converting digital data from/to MCU in the analog data (by differential voltage levels said dominant and recessive) across the bus lines CANH and CANL (fig. 5)

CAN CONNECTOR (SUBD-9 Type)					
Terminal	**Name**	**Function**	**Specifications**		**Notes**
1	-				Unwired
2	CAN_L	Signal CANL	Receiver	recessive $V_{rec(RX)max}$=0,5V dominant $V_{dom(RX)min}$=0,9V threshold voltage 0,5V<$V_{th(RX)dif}$<0,9V	
			Output	recessive -50mV≤$V_{O(dif)}$≤+50mV, dominant $V_{O(dif)min}$=1,5V dominant $V_{O(dom)max}$=2,25V	
3	GND_CAN		Bus side reference for signals and power supply		
4	-				Unwired
5	-				Unwired
6	-				Unwired
7	CAN_H	Signal CANH	Receiver	recessive $V_{rec(RX)max}$=0,5V dominant $V_{dom(RX)min}$=0,9V threshold voltage 0,5V<$V_{th(RX)dif}$<0,9V	
			Output	recessive -50mV≤$V_{O(dif)}$≤+50mV, dominant $V_{O(dif)min}$=1,5V dominant $V_{O(dom)min}$=2,75V	
8	-				Unwired
9	CAN_V+	Supply	12÷24Vdc		

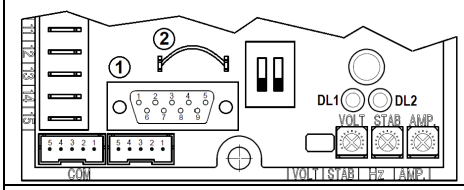

Fig. 2 **M2K^S**
1) CAN Connector
2) Termination resistor link

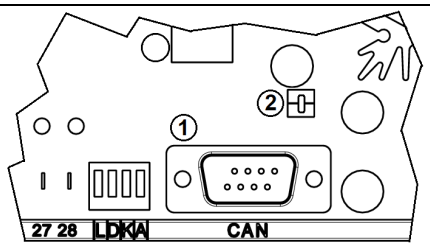

Fig. 3 **M3K^S**
1) CAN Connector
2) Termination resistor link

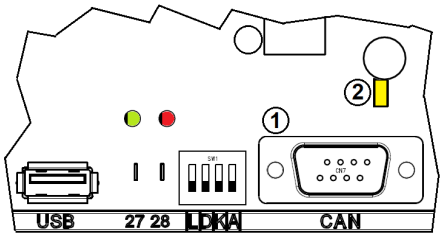

Fig. 4 **M3K^S-HD**
1) CAN Connector
2) Termination resistor jumper

The received and transmitted signals are galvanically isolated from the control and power part of the regulator (Fig. 5)

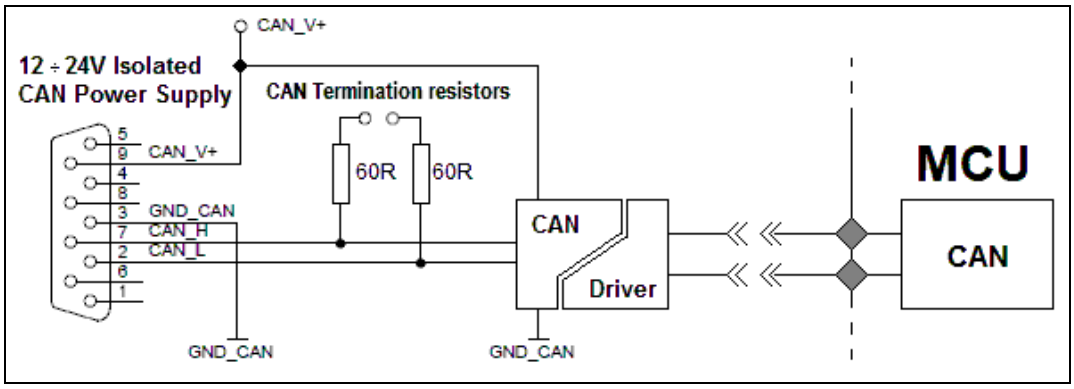

Fig. 5: functional diagram of the CANBus connection

⚠	For operation of the part isolated from the regulator control and power parts, it is necessary to supply the CAN module with a voltage, isolated, between 12VDC and 24VDC, (fig. 5)

⚠	CANBus connection requires a proper line termination; if the connector of the CAN cable in use does not have a built-in termination resistor (fig. 5), it is possible to use the one already provided on the board by insertion of the link or jumper CAN_TERM (fig. 2, 3 or 4).

2.2 Embedded fail-safe features

Undervoltage protection
If the Bus side supply voltage is too low, the transceiver switches off and disengages from the bus (zero load)
With Bus side properly supplied, if the supply voltage of the regulator is too low, the CAN bus switches to dominant state and the dominant timeout timer is started.

Dominant time-out function
Every time that the dominant state is active (driven by control part or due to an undervoltage condition control side) a “dominant time-out” timer is started; if such condition persists for longer than some millisecond (variable from 0,3ms to 5ms), the transmitter is disabled, releasing the bus lines to recessive state.
This function prevents a hardware and/or software application failure from driving the bus lines to a permanent dominant state (blocking all network communications). The dominant time-out timer is reset by a recessive state required by the controller.

3 SAE J1939 MAIN ASPECTS

The SAE J1939 is a wide protocol used in many different applications.

For the purpose of this document, the relevant facts of the SAE J1939 protocol when applied to the Generator Sets and Industrial application are described in the following sections.

3.1 Physical layer

This layer, which details the electric parameters of the physical medium to be used to communicate between different devices within the network, relays on the following characteristics:

- Based on J1939/11 specification
- Baud rate: 250Kbit/s
- Shielded twisted pair wire
- Maximum network length (Bus length): 40m
- Maximum cable stub: 1m (0,66m max on board the alternator + 0,33m max for the off board tool)
- Minimum node distance: 0,1m
- Maximum node distance: 40m
- Maximum nodes (ECU) number in a network: 30

3.2 Data link layer

This layer specifies the structure of the data to be used in the protocol, the mechanism for a reliable transmission and the bit stuffing strategy.

The main points are:

- Message ID: 29bit
- It refers to ISO 11898-1 standard specification
- It allows the non-destructive bus mastering
- It guaranties the reliability of transmission using the 15 bit CRC
- It guaranties that at least one node correctly receives the transmitted message

3.3 Transport layer

This layer provides data segmentation of messages which do not fit within the 8 bytes payload of standard CAN messages, in particular it uses the BAM and the CM segmentation methods(1).

4 MxKs DIGITAL REGULATORS MESSAGES

The **MxKs** Digital Regulators uses SAE J1939 messages frames to communicate data to other devices in the CAN network and to read informations to be used to perform the control of the alternators.
In compliance with such standard, these messages have 29-bit ID (extended) frame).

4.1 Messages published in the CAN network

To prevent the duplication of the messages when multiple **MxKs** regulators are used in the same network, each **MxKs** unit must be configured with a unique Source Address (SA) using its own configuration tool(2).

For plants consisting of several gen-sets, the preferable structure is that which provides that each **MxKs** regulator is connected to the gen-set CAN Bus (i.e. CAN0, connecting the engine, the alternator and the control board). The connection between the various gen-sets is made with a different CAN Bus (i.e. CAN1), as represented in Fig. 6

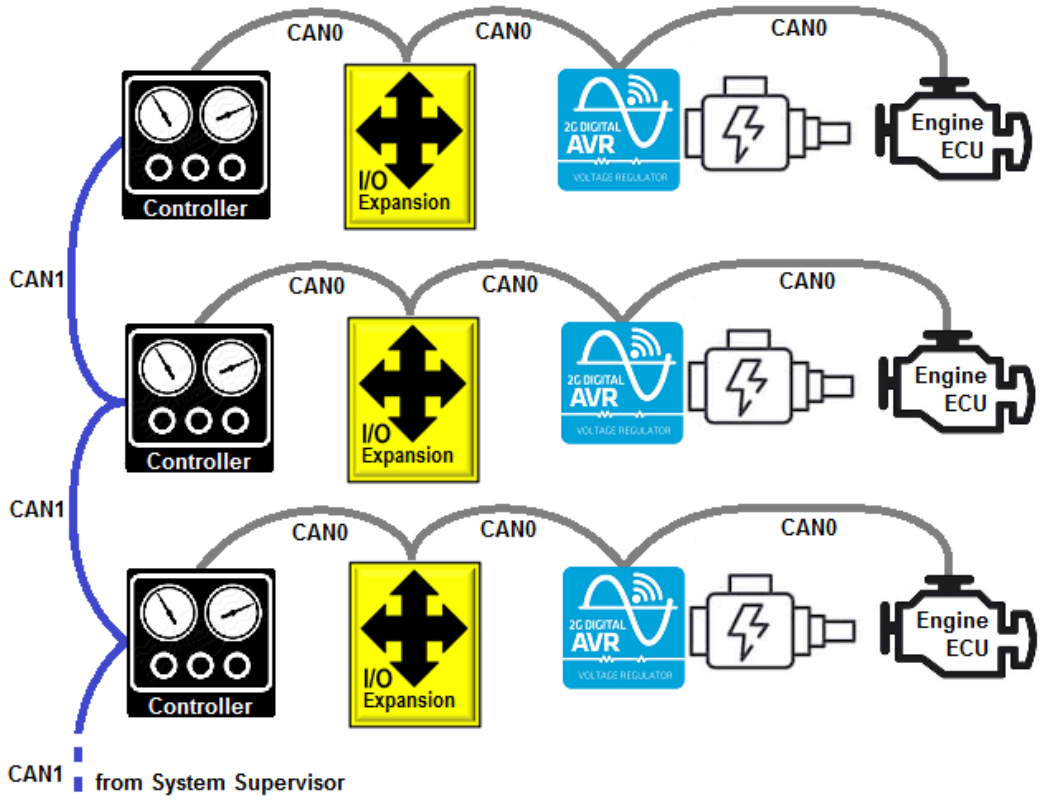

Fig. 6: general structure of multiple gen-sets plant

On the CAN0 line, all the engines ECUs have the standard SA=0; in the same way, all the **MxKs** devices can have the same SA defined in compliance with the reference standard.

Appendix B (and later) of introductory specification SAE J1939 contains the list of pre-assigned addresses.

Classified as *global* (they apply to all devices), source adresses 0÷63 and 248÷255 are already defined by the reference standard, source adresses 64÷127 are reserved for future assignment by SAE, all these address cannot be used

Source addresses 128÷247 are Industry Group Specific; for group 5 *Industrial-Process Control-Stationary (Gen-Sets)* the *Preferred SA* are indicated in SAE J1939 "*SURFACE VEHICLE RECOMMENDED PRACTICE - Recommended Practice for a Serial Control and Communications Vehicle Network*", *Table B7,* below reported for reference (to be verified with latest version of SAE J1939 standard)

Table B7: J1939 PREFERRED ADDRESSES
INDUSTRY GROUP #5 – INDUSTRIAL, PROCESS CONTROL, STATIONARY EQUIPMENT

SA	***Equipment***	***Notes***
128÷207	*Reserved for future assignment by SAE.*	*Used for dynamic address assignment (self-configurable)*
208÷234	*Reserved for future assignment*	*Used for individual preassigned addresses*
235	*Supplemental Sensor Processing Unit #1*	
236	*Supplemental Sensor Processing Unit #2*	
237	*Supplemental Sensor Processing Unit #3*	
238	*Supplemental Sensor Processing Unit #4*	
239	*Supplemental Sensor Processing Unit #5*	
240	*Supplemental Sensor Processing Unit #6*	
241	*Engine Monitor #1*	
242	*Engine Monitor #2*	
243	*Engine Monitor #3*	
244	*Engine Monitor #4*	
245	*Engine Monitor #5*	
246	*Engine Monitor #6*	
247	*Engine Monitor #7*	

MxKs Source Address(2), should be assigned in the interval 208÷234, default value is 210 = 0xD2

4.1.1 Standard messages

The **MxKs** Digital Regulators Series is compliant with the SAE J1939-75 standard, which describes the messages to be used in power generation applications.

In order to communicate the AC Electric parameters and the diagnostic status to the other devices of the CAN network, the **MxKs** Digital Regulator publishes the PGNs foreseen in the SAE J1939-75 having at least one significative SPN and the DM1 message(1).

Paragraph 4.1.3 details which PGNs are published by each type of regulator.

The message definitions are listed in chapter 5 by functional groups, then in every group they are listed in numerical order by PGN; functional groups are:

- Phase U - Parameter Group Definitions
- Overall quantities - Parameter Group Definitions
- Other quantities - Parameter Group Definitions
- Active Diagnostic Troubles Codes DM1(1)

4.1.2 Proprietary messages in J1939

With a proper field format (compliant with SAE J1939) Meccalte specific parameter groups are supported even if they are not foreseen in such specific standard. All parameters from **MxKs** regulators series may be read and written. The specific protocol is encapsulated inside the CAN frame and it was implemented as far as possible in the spirit of, as well as the specific content of, the recommended practice.
The proprietary message definitions are listed in chapter 6 by functional groups, then in every group they are listed in numerical order by PGN; functional groups are:

- Proprietary Broadcast - Parameter Group Definitions
- Proprietary Destination Specific Messages - Parameter Group Definitions
- Proprietary Commands and Requests - Parameter Group Definitions

4.1.3 Standard and Proprietary messages based on regulator type

CANBus equipped devices are:

- **M3K^{S-HD}** (full bridge phase controlled power converter, up to 3 voltage sensing channel, current sensing channel, HDR, USB embedded);
- **M3K^{S}**: (full bridge phase controlled power converter, up to 3 voltage sensing channel, current sensing channel)
- **M2K^{S}**: (half bridge phase controlled power converter, single voltage sensing channel, no current sensing.

Effective PGNs published by each device are resumed in the following table

PGN #	Description	Mnemonic	Ref. Std.	M2K^{S}	M3K^{S}	M3K^{S-HD}
64934	AVR EXCITATION STATUS	VREP	J1939-75	●	●	●
65021	PHASE C (W) BASIC AC	GPCAC	J1939-75		●	●
65024	PHASE B (V) BASIC AC	GPBAC	J1939-75		●	●
65025	PHASE A (U) AC REACTIVE POWER	GPAACR	J1939-75		●	●
65026	PHASE A (U) AC POWER	GPAACP	J1939-75		●	●
65027	PHASE A (U) BASIC AC	GPAAC	J1939-75	●	●	●
65028	TOTAL AC REACTIVE POWER	GTACR	J1939-75		●	●
65029	TOTAL AC POWER	GTACP	J1939-75		●	●
65030	AVERAGE BASIC AC	GAAC	J1939-75		●	●
65226	ACTIVE DIAGNOSTIC MESSAGE	DM1(1)	J1939-73	●	●	●
61184	REAL TIME CONTROLS	RTC	PROPRIETARY	●	●	●
65281	ALARMS(3)		PROPRIETARY	●	●	●
65283	STATUS(3)		PROPRIETARY	●	●	●
65287	AUXILIARY BASIC AC(4)	GAUXAC	PROPRIETARY	●	●	●
65312	CONFIGURABLE DATA		PROPRIETARY	●	●	●
1639378	READ VALUE		PROPRIETARY	●	●	●
1642706	PEER TO PEER WRITE PARAMETER		PROPRIETARY	●	●	●
1700050	BROADCAST WRITE PARAMETER		PROPRIETARY	●	●	●

Proprietary messages activated by CONFIGURATION FLAG #32: Bit B31 **`CAN_Proprietary`** set to 1 by default (Parameter P[35] **`CONFIGURATION_1`** at address A[70])

If Mecc Alte proprietary protocol is disabled, **MxK^{S}** publishes only SAE J1939 messages then it doesn't accept any command from the Bus.

⚠	If in the Group Controller the MeccAlte proprietary protocol is not implemented or this information is unknown, it's strongly advisable to DISABLE the proprietary protocol on **MxK^{S}** devices by resetting the proper bit on CONFIGURATION_1 (Bit B31=0b#0) before any other operation.

4.1.3 Bandwith

At the transmission speed (250Kbit/s) and with the length of the messages (extended ID and payload of 8 bytes) defined by the Standard, the bandwidth of the CAN channel allows publication on the bus of a maximum of 156 messages.

For the J1939 compliant part only, **M3K^{S}** and **M3K^{S-HD}** publishes 10 messages while **M2K^{S}** publishes 3 messages; for the PROPRIETARY part all devices publishes up to a further 4 messages with Repetition Rate = 100ms.

5 STANDARD SAE J1939 PARAMETER GROUP DEFINITIONS

The messages related to AC electric parameters which refer to J1939-75 are the following

5.1 Phase U - Parameter Group Definitions

PGN 65025 - GENERATOR PHASE A (U) AC REACTIVE POWER: GPAACR
Transmission repetition rate: 100 ms
Data length: 8
Data page: 0
PDU format: 254
PDU specific: 1
Default priority: 3
Parameter group number: 65,025 ($00FE01_{16}$)

Byte:	Bit:	Description	SPN	Ref. Std.
1-4		Generator Phase A (U) Reactive Power	2457	J1939-75
5-6		Generator Phase A (U) Power Factor	2465	J1939-75
7	8-3	Not defined	-	J1939-75
7	2,1	Generator Phase A (U) Power Factor Lagging	2519	J1939-75
8		Not defined	-	J1939-75

PGN 65026 - GENERATOR PHASE A (U) AC POWER: GPAACP
Transmission repetition rate: 100 ms
Data length: 8
Data page: 0
PDU format: 254
PDU specific: 2
Default priority: 3
Parameter group number: 65,026 ($00FE02_{16}$)

Byte:	Description	SPN	Ref. Std.
1-4	Generator Phase A (U) Real Power	2453	J1939-75
5-8	Generator Phase A (U) Apparent Power	2461	J1939-75

PGN 65027 - GENERATOR PHASE A (U) BASIC AC QUANTITIES: GPAAC
Transmission repetition rate: 100 ms
Data length: 8
Data page: 0
PDU format: 254
PDU specific: 3
Default priority: 3
Parameter group number: 65,027 ($00FE03_{16}$)

Byte:	Description	SPN	Ref. Std.
1-2	Generator Phase A-B (U-V) Line-Line AC RMS Voltage	2441	J1939-75
3-4	Generator Phase A (U) Line-Neutral AC RMS Voltage	2445	J1939-75
5-6	Generator Phase A (U) AC Frequency	2437	J1939-75
7-8	Generator Phase A (U) AC RMS Current	2449	J1939-75

5.3 Overall quantities - Parameter Group Definitions

PGN 65028 - GENERATOR TOTAL AC REACTIVE POWER: GTACR
Transmission repetition rate: 100 ms
Data length: 8
Data page: 0
PDU format: 254
PDU specific: 4
Default priority: 3
Parameter group number: 65,028 ($00FE04_{16}$)

Byte:	Bit:	Description	SPN	Ref. Std.
1-4		Generator Total Reactive Power	2456	J1939-75
5-6		Generator Overall Power Factor	2464	J1939-75
7	8-3	Not defined	-	J1939-75
7	2,1	Generator Overall Power Factor Lagging	2518	J1939-75
8		Not defined	-	J1939-75

PGN 65029 - GENERATOR TOTAL AC POWER: GTACP
Transmission repetition rate: 100 ms
Data length: 8
Data page: 0
PDU format: 254
PDU specific: 5
Default priority: 3
Parameter group number: 65,029 ($00FE05_{16}$)

Byte:	Description	SPN	Ref. Std.
1-4	Generator Total Real Power	2452	J1939-75
5-8	Generator Total Apparent Power	2460	J1939-75

PGN 65030 - GENERATOR AVERAGE BASIC AC QUANTITIES: GAAC
Transmission repetition rate: 100 ms
Data length: 8
Data page: 0
PDU format: 254
PDU specific: 6
Default priority: 3
Parameter group number: 65,030 ($00FE06_{16}$)

Byte:	Description	SPN	Ref. Std.
1-2	Generator Average Line-Line AC RMS Voltage	2440	J1939-75
3-4	Generator Average Line-Neutral AC RMS Voltage	2444	J1939-75
5-6	Generator Average AC RMS Frequency	2436	J1939-75
7-8	Generator Average AC RMS Current	2448	J1939-75

5.4 Other quantities - Parameter Group Definitions

PGN 64934 - VOLTAGE REGULATOR EXCITATION STATUS: VREP
Transmission repetition rate: 100 ms
Data length: 8
Data page: 0
PDU format: 253
PDU specific: 166
Default priority: 3
Parameter group number: 64,934 ($00FDA6_{16}$)

Byte:	Description	SPN	Ref. Std.
1-2	Generator Excitation Field Voltage	3380	J1939-75
3-4	N.A. (Generator Excitation Field Current)	3381	J1939-75
5-6	N.A. (Generator Output Voltage Bias percentage)	3382	J1939-75
7-8			J1939-75

PGN 65021 - GENERATOR PHASE C (W) BASIC AC QUANTITIES: GPCAC
Transmission repetition rate: 100 ms
Data length: 8
Data page: 0
PDU format: 253
PDU specific: 253
Default priority: 3
Parameter group number: 65,021 ($00FDFD_{16}$)

Byte:	Description	SPN	Ref. Std.
1-2	Generator Phase C-A (W-U) Line-Line AC RMS Voltage	2443	J1939-75
3-4	Generator Phase C (W) Line-Neutral AC RMS Voltage	2447	J1939-75
5-6	Generator Phase C (W) AC Frequency	2439	J1939-75
7-8	N.A. (Generator Phase C (W) AC RMS Current)	2451	J1939-75

PGN 65024 - GENERATOR PHASE B (V) BASIC AC QUANTITIES: GPBAC
Transmission repetition rate: 100 ms
Data length: 8
Data page: 0
PDU format: 254
PDU specific: 0
Default priority: 3
Parameter group number: 65,024 ($00FE00_{16}$)

Byte:	Description	SPN	Ref. Std.
1-2	Generator Phase B-C (V-W) Line-Line AC RMS Voltage	2442	J1939-75
3-4	Generator Phase B (V) Line-Neutral AC RMS Voltage	2446	J1939-75
5-6	Generator Phase B (V) AC Frequency	2438	J1939-75
7-8	N.A. (Generator Phase B (V) AC RMS Current)	2450	J1939-75

5.5 Active Diagnostic Troubles Codes DM1

M2K^{S}, **M3K^{S}** and **M3K^{S-HD}** Digital Regulators controls and continuously monitors the AC electric parameters of the generators and publishes the DM1 Diagnostic message according to the detected error condition.

This message is compliant with the J1939-73 standard, whose quotations are highlighted in *italics* in the text below, until its payload not exceeds the 8 bytes of standard CAN messages.

DM1 *is made up of four (4) independent fields, as follows:*

a. Suspect Parameter Number (SPN) 19 bits
b. Failure Mode Identifier (FMI) 5 bits
c. Occurrence Count (OC) 7 bits
d. SPN Conversion Method (CM) 1 bit

These independent parameters are not used together to form a number. They are merely a set of information that helps in understanding the failure that is being reported.

The information communicated is limited to the currently active diagnostic trouble codes (DTCs). The active diagnostic codes are preceded by the diagnostic lamp status. Together they convey the diagnostic condition of the transmitting electronic component to other components on the network. Occurrence counts for currently active diagnostic trouble codes isn't provided.

PGN 65226 – ACTIVE DIAGNOSTIC MESSAGE: DM1

Transmission repetition rate: 1000 ms (normal update rate)
A DM1 message is transmitted whenever a DTC becomes an active fault and at a normal update rate of only once per second thereafter. If a fault has been active for 1 second or longer, and then becomes inactive, a DM1 message shall be transmitted to reflect this state change. If a different DTC changes state within the 1 second update period, a new DM1 message is transmitted to reflect this new DTC.

Data length: 8(1)
Data page: 0
PDU format: 254
PDU specific: 202
Default priority: 6
Parameter group number: 65,226 ($00FECA_{16}$)

Byte:	Bit:	Description	SPN	Ref. §	J1939-73 §
1	8-7	Malfunction Indicator Lamp Status	1213	5.5.1	5.7.1.1
1	6-5	Red Stop Lamp Status	623	5.5.1	5.7.1.2
1	4-3	Amber Warning Lamp Status	624	5.5.1	5.7.1.3
1	2-1	Protect Lamp Status	987	5.5.1	5.7.1.4
2	8-7	Flash Malfunction Indicator Lamp	3038	5.5.1	5.7.1.5
2	6-5	Flash Red Stop Lamp	3039	5.5.1	5.7.1.6
2	4-3	Flash Amber Warning Lamp	3040	5.5.1	5.7.1.7
2	2-1	Flash Protect Lamp	3041	5.5.1	5.7.1.8
3		SPN, least significant byte (most significant at bit 8)	1214	5.5.2	5.7.1.9
4		SPN, second byte (most significant at bit 8)		5.5.2	5.7.1.9
5	8-6	SPN, 3 most significant bits (most significant at bit 8)		5.5.2	5.7.1.9
5	5-1	FMI (most significant at bit 5)	1215	5.5.3	5.7.1.10
6	8	SPN Conversion Method	1706	5.5.4	5.7.1.11
6	7-1	Occurrence Count	1216	5.5.5	5.7.1.12

⚠	If more than one alarm is active the standard defined payload would exceed 8 bytes and the the DM1 message should be use the BAM and the CM segmentation methods, **MxK^{S}** Digital Regulator instead publishes a DM1 for each active alarm, the first DM1 relative to the first alarm at the beginning of the sequence of expected PGNs and all the others single DM1 relative to each other alarms at the end of such sequence.

5.5.1 Indicators Lamps

Malfunction Indicator Lamp (MIL, SPN 1213)
As the *lamp is only illuminated when there is an emission-related trouble code active* and this case is not related to the AVR, it remain OFF in any woking condition, (Byte 1, Bit 8-7 = 0-0)

Red Stop Lamp (RSL, SPN 623)
This lamp is used to relay trouble code information that is of a severe enough condition that it warrants stopping the genset, for alarm conditions involving the RSL activation ref. Annex E "**M2KS M3KS M3KS-HD** CAN J1939 PGN65226 DM1 based on L[36] A[472] ALARM"

Amber Warning Lamp (AWL, SPN 624)
This lamp is used to relay trouble code information that is reporting a problem with the genset system but it *need not be immediately stopped.* For alarm conditions involving the AWL activation ref. Annex E "**M2KS M3KS M3KS-HD** CAN J1939 PGN65226 DM1 based on L[36] A[472] ALARM"

Protect Lamp (PL, SPN 987)
As the *lamp is used to relay trouble code information that is reporting a problem with a system that is most probably not electronic subsystem related,* it remain OFF in any woking condition, (Byte 1, Bit 2-1 = 0-0)

Flashing Lamp cababilities
Flash Malfunction Indicator Lamp (SPN 3038) providing *the capability to flash the MIL* [Flash Red Stop Lamp (SPN 3039) providing *the capability to flash the RSL,* Flash Amber Warning Lamp (SPN 3040) providing *the capability to flash the AWL* and Flash Protect Lamp (SPN 3041) providing *the capability to flash the Protect Lamp*] are not used then all bit of Byte 2 are set to 1 (Byte 2 = 0xFF)

5.5.2 Suspect Parameter Number (SPN 1214)

This 19-bit number is used to identify the item for which diagnostics are being reported. The SPN is used for multiple purposes, some of those that are specific to diagnostics are:

1. *to identify a least repairable subsystem that has failed;*
2. *to identify subsystems and or assemblies that may not have hard failures but may be exhibiting abnormal operating performance;*
3. *identifying a particular event or condition that will be reported;*
4. *to report a component and non-standard failure mode.*

SPNs are assigned to each individual parameter in a Parameter Group and to items that are relevant to diagnostics but are not a parameter in a Parameter Group. SPNs are independent of the source address for the message. However, the source address may be necessary to determine which controller on the network performed the diagnosis.
The first 511 SPNs are reserved and will be assigned the exact same number as the Parameter Identifier (PID) used in SAE J1587. That is, the SPN for an accelerator problem will be reported as SPN 91 which is SAE J1587 PID 91. All other SPNs will be numbered sequentially starting at 512 and incrementing by one for each new assignment. Refer to SAE J1939 Appendix C.
Proprietary Suspect Parameter Numbers have been established to allow the reporting of manufacturer specific diagnostics. The interpretation of the diagnostic trouble codes using proprietary SPNs varies by manufacturer. There are 4096 Suspect Parameter Numbers defined for proprietary diagnostics. The SPNs for Proprietary Diagnostics cover the range 520192 to 524287. See SAE J1939-73 *APPENDIX F for the list of restrictions for the SPNs for Proprietary Diagnostics.*

5.5.3 Failure Mode Identifier (SPN 1215)

The FMI defines the type of failure detected in the subsystem identified by an SPN. Note that the failure may not be an electrical failure but may instead be a subsystem failure or condition needing to be reported to the service technician and maybe also to the operator. Conditions can include system events or status that need to be reported. The FMI, SPN, SPN Conversion Method and Occurrence Count fields combine to form a given diagnostic trouble code. The "Reserved to be Assigned by SAE" FMIs will be assigned by the SAE J1939 Control and Communications Subcommittee if additional failure modes become necessary.
MxKS Digital Regulator publishes a reduced set of FMI (0, 1, 13, 16 and 18)*, for relationship between alarm condition and FMI* ref. Annex E "**M2KS M3KS M3KS-HD** CAN J1939 PGN65226 DM1 based on L[36] A[472] ALARM". For the complete list of currently defined FMIs, see SAE J1939-73 APPENDIX A.

5.5.4 SPN Conversion Method (SPN 1706)

SPN is represented as Intel format for all 19 bits with the SPN Conversion Method set to 0.

DTC																															
Byte 3								Byte 4								Byte 5								Byte 6							
8 least significant bits of SPN (bit 8 most significant)								Second byte of SPN (bit 8 most significant)								3 most significant bits of SPN & FMI (bit 8 SPN msb & bit 5 FMI msb)															
SPN																			FMI					CM	OC						
B_8	B_7	B_6	B_5	B_4	B_3	B_2	B_1	B_8	B_7	B_6	B_5	B_4	B_3	B_2	B_1	B_8	B_7	B_6	B_5	B_4	B_3	B_2	B_1	B_8	B_7	B_6	B_5	B_4	B_3	B_2	B_1
																								0	1	1	1	1	1	1	1

5.5.5 Occurrence Count (SPN 1216)

In the **MxKs** AVR family occurrence count is not available; this field is set to all binary ones ($7F_{16}$ - 127_{10}).

5.5.6 Examples

EXAMPLE 1
The following illustrates the message format for when a request of the DM1 is made and there are zero active faults, or when there are zero active faults and the message is being transmitted at its regular one second interval. The currently defined lamps (Malfunction Indicator Lamp, Red Stop Lamp, Amber Warning Lamp, and Protect Lamp) should reflect the present state of the transmitting electronic component. (In said condition all Lamps are off then Byte 1 and Byte 2 are set consequentely)

Byte	Bit	Description	Setting	Ref. Standard
1	8-7	Malfunction Indicator Lamp Status	0 - 0	J1939-73 §5.7.1.1
1	6-5	Red Stop Lamp Status	0 - 0	J1939-73 §5.7.1.2
1	4-3	Amber Warning Lamp Status	0 - 0	J1939-73 §5.7.1.3
1	2-1	Protect Lamp Status	0 - 0	J1939-73 §5.7.1.4
2	8-7	Flash Malfunction Indicator Lamp	1 - 1	J1939-73 §5.7.1.5
2	6-5	Flash Red Stop Lamp	1 - 1	J1939-73 §5.7.1.6
2	4-3	Flash Amber Warning Lamp	1 - 1	J1939-73 §5.7.1.7
2	2-1	Flash Protect Lamp	1 - 1	J1939-73 §5.7.1.8

The original publication of the recommended practice for engines and vehicles complying to government regulated requirements *defined that bytes 6 through 3 should be set to all ones when there are zero faults. This particular implementation is no longer permitted. The recommended setting for bytes 6-3 is shown below.* Use of all ones is shown in column NOTES of the table below.

Byte	Bit	Description	Recommended Setting	NOTES
3		SPN, L.S. Byte (MS at bit 8)	0	SPN = 524287 Indicates not available (N.A.)
4		SPN, second byte (MS at bit 8)	0	
5	8-6	SPN, 3 M.S. bits (most significant at bit 8)	0	
5	5-1	FMI (most significant at bit 5)	0	FMI = 31 Indicates N.A.
6	8	SPN Conversion Method	0	CM = 1 Indicates N.A.
6	7-1	Occurrence Count	0	OC = 127 Indicates N.A.
7			255	
8			255	

EXAMPLE 2
The following illustrates the message format for when there is more than one diagnostic trouble code.
Given:
a=lamp status
b=SPN
c=FMI
d=CM and OC
Message form should be: a,b,c,d,b,c,d,b,c,d,b,c,d....etc. and the transport protocol of SAE J1939-21 should be used to send the information because it requires more than 8 data bytes, **MxKs** Digital Regulator instead publishes a DM1 for each active alarm; in the exemple the Over Temperature Alarm (85°) become active (at t=482,00s) after ther activation of the Limit Temperature Alarm (70°C, already active at t=480,99s, which remains active because if θ_{MCU}>85°C it is also true that θ_{MCU}>70°C)

Bus streaming messages														Notes
. . .														
CAN	1	3	0FE03	D2->*	8	FF	FF	FB	00	0A	1E	00	00	480.976270 R	
CAN	1	3	0FDA6	D2->*	8	2B	7E	FF	FF	FF	FF	FF	FF	480.976850 R	
CAN	1	3	0FF01	D2->*	8	00	00	00	00	FF	FF	FF	FF	480.977430 R	
CAN	1	3	0FF03	D2->*	8	0C	00	02	00	52	FF	FF	FF	480.978010 R	
CAN	1	3	0FF20	D2->*	8	9C	99	D0	41	3A	53	05	41	480.978560 R	
CAN	1	3	**0FECA**	D2->*	8	04	FF	10	F0	**F0**	7F	FF	FF	**480.998500** R	Limit Temp.
. . .															
CAN	1	3	0FE03	D2->*	8	FF	FF	FB	00	05	1E	00	00	481.984220 R	
CAN	1	3	0FDA6	D2->*	8	24	7E	FF	FF	FF	FF	FF	FF	481.984790 R	
CAN	1	3	0FF01	D2->*	8	00	00	00	00	FF	FF	FF	FF	481.985380 R	
CAN	1	3	0FF03	D2->*	8	0C	00	02	00	52	FF	FF	FF	481.985950 R	
CAN	1	3	0FF20	D2->*	8	1A	A1	D0	41	4D	70	05	41	481.986510 R	
CAN	1	3	**0FECA**	D2->*	8	04	FF	10	F0	**E0**	7F	FF	FF	**482.006490** R	Over Temp.
CAN	1	3	**0FECA**	D2->*	8	04	FF	10	F0	**F0**	7F	FF	FF	482.031500 R	Limit Temp.
. . .															
CAN	1	3	0FE03	D2->*	8	FF	FF	FB	00	08	1E	00	00	482.993760 R	
CAN	1	3	0FDA6	D2->*	8	1F	7E	FF	FF	FF	FF	FF	FF	482.994340 R	
CAN	1	3	0FF01	D2->*	8	00	00	00	00	FF	FF	FF	FF	482.994930 R	
CAN	1	3	0FF03	D2->*	8	0C	00	02	00	52	FF	FF	FF	482.995510 R	
CAN	1	3	0FF20	D2->*	8	9C	99	D0	41	FD	59	05	41	482.996060 R	
CAN	1	3	**0FECA**	D2->*	8	04	FF	10	F0	**E0**	7F	FF	FF	483.015880 R	Over Temp.
CAN	1	3	**0FECA**	D2->*	8	04	FF	10	F0	**F0**	7F	FF	FF	483.040880 R	Limit Temp.
. . .															

6 PROPRIETARY MESSAGES PARAMETER GROUP DEFINITIONS

All parameters from **MxKs** Digital Regulator may be read and written. The protocol, encapsulated inside the CAN frame and following J1939 recommended practice as much as possible and considering a proper node address configuration(1), use the following formats:

- the PDU Format PF=PDU2 for proprietary CAN data frames which have not a specific destination. These messages are referred as Proprietary Broadcast Messages.
- the PDU Format PF=PDU1 for proprietary CAN data frames which have a specific destination.

6.1 Proprietary Broadcast - Parameter Group Definitions

According to the J1939 recommended practice, the MeccAlte **MxKs** Digital Regulator sends the proprietary Broadcast messages with the following structure:

Default priority: 3
Reserved bit: 0
Data page: 0
Specific **MxKs** parameters undefined in J1939 have PGN=$0CFF00_{16}$÷$0CFFFF_{16}$ (PGN=65280÷65535)

Priority			R	P	PDU Format								PDU Specific							
3			0	0	255															
0	1	1	0	0	1	1	1	1	1	1	1	1								
0	C				F				F				00_{16}÷FF_{16}							
					65280								0÷255							

The **MxKs** Digital Voltage Regulator transmit through the bus the following proprietary messages based on PDU2 format :

- Active alarms, represented on 32 bits allocated in operative RAM location #36 (address A[472]), using the dedicated (proprietary) PGN 65281
- Regulator status, represented on 32 bits allocated in operative RAM location #35 (address A[470]), using the dedicated (proprietary) PGN 65283
- Regulator supply voltage and frequency (Generator Auxiliary Basic AC Quantities), both represented on 32 bits allocated in operative RAM locations #17 (address A[434]) and #20 (address A[440]) respectively, using the dedicated (proprietary) PGN 65287
- Up to two configurable(5) E^2PROM parameters or operative RAM locations using the the dedicated (proprietary) PGN 65312

⚠	Some of the addresses dedicated to the **MxKs** Digital Regulator proprietary broadcast messages may be already used by other devices. This is not a problem, because part of the message ID is the source address, which will be different between the engine (0) and **MxKs** device (to be defined, see §4.1). By way of example, the following proprietary PGNs should be broadcast by the engine control units: 65280, 65281, 65282, 65284, 65296, 65298, 65301, 65313, 65351, 65360, 65395, 65409.

PGN 65281 (PROPRIETARY) ALARM
Transmission repetition rate: 100 ms
Data length: 8
Data page: 0
PDU format: 255
PDU specific: 01
Default priority: 3
Parameter group number: 65,281 ($00FF01_{16}$)

Byte	Bit	MxK	Alarm description	Mnemonic	Additional Informations
1	1	L[36]-B_0	Reserved		
1	2	L[36]-B_1	Checksum EEprom	CS	
1	3	L[36]-B_2	Reserved(3)(4)	LOS	
1	4	L[36]-B_3	Reserved (not active)	RBDS	
1	5	L[36]-B_4	Reserved (not active)	RBDF	
1	6	L[36]-B_5	Over voltage (@ ω_N)	OV	
1	7	L[36]-B_6	Under voltage (@ ω_N)	UV	
1	8	L[36]-B_7	Short circuit	SC	
2	1	L[36]-B_8	Over Excitation (Excitation Over Current)	OEXC	
2	2	L[36]-B_9	Under Excitation (Low Excitation Current)	UEXC	
2	3	L[36]-B_{10}	Supply Over Voltage	SOV	
2	4	L[36]-B_{11}	Phase Over current (Phase U)	OC	
2	5	L[36]-B_{12}	Reserved(3)(4)	OL	
2	6	L[36]-B_{13}	Under Speed (Start Up V/f)	US	
2	7	L[36]-B_{14}	Over Speed	OS	
2	8	L[36]-B_{15}	Free for future use		
3	1	L[36]-B_{16}	Regulator Over Temperature (85°C)	OTR	
3	2	L[36]-B_{17}	Regulator Maximum Temperature (70°C)	LTR	
3	3	L[36]-B_{18}	Reserved (not active)	OTU	
3	4	L[36]-B_{19}	Reserved (not active)	OTV	
3	5	L[36]-B_{20}	Reserved (not active)	OTW	
3	6	L[36]-B_{21}	Reserved (not active)	OTDE	
3	7	L[36]-B_{22}	Reserved (not active)	OTNDE	
3	8	L[36]-B_{23}	Free for future use		
4	1	L[36]-B_{24}	Reserved(3)(4)	PS	
4	2	L[36]-B_{25}	Capacitive Load(6)	CL	Also PGN65028 - SPN2519
4	3	L[36]-B_{26}	Reserved (not active)	ERRVM	Also PGN65000 - SPN2527
4	4	L[36]-B_{27}	Negative Power	NP	
4	5	L[36]-B_{28}	Reserved (not active)	OOR	
4	6	L[36]-B_{29}	Reserved (not active)	FPSW	
4	7	L[36]-B_{30}	Reserved (not active)	UQ	
4	8	L[36]-B_{31}	Free for future use		
5-6		-	Reserved		
7-8		-	Reserved		

PGN 65283 (PROPRIETARY) STATUS[3]
Transmission repetition rate: 100 ms
Data length: 8
Data page: 0
PDU format: 255
PDU specific: 03
Default priority: 3
Parameter group number: 65,283 ($00FF03_{16}$)

Byte	Bit	MxK	Status description	Mnemonic	Additional Informations
1	1	L[35]-B_0	Reserved[3][4]	SST	
1	2	L[35]-B_1	Start Up V/f relationship Active	VFSU	
1	3	L[35]-B_2	Working V/f relationship Active	VF	
1	4	L[35]-B_3	Loss of sensing Phase 1	LOSU	Loss of sensing at low level 0b#0
1	5	L[35]-B_4	Loss of sensing Phase 2	LOSV	Loss of sensing at low level 0b#0
1	6	L[35]-B_5	Loss of sensing Phase 3	LOSW	Loss of sensing at low level 0b#0
1	7	L[35]-B_6	Reserved (not active)	PM	Also PGN65000 - SPN2526
1	8	L[35]-B_7	Reserved (not active)	ERRPM	Also PGN65000 - SPN2526
2	1	L[35]-B_8	Reserved (not active)	FM	Also PGN65000 - SPN2528
2	2	L[35]-B_9	Reserved (not active)	ERRFM	Also PGN65000 - SPN2528
2	3	L[35]-B_{10}	Reserved (not active)	SYNC	Also PGN65000 - SPN2529
2	4	L[35]-B_{11}	Reserved (not active)	ERRS	Also PGN65000 - SPN2529
2	5	L[35]-B_{12}	Reserved (not active)	DBUS	Also PGN65000 - SPN2530
2	6	L[35]-B_{13}	Reserved (not active)	ERRDB	Also PGN65000 - SPN2530
2	7	L[35]-B_{14}	Open Loop Active (Excitation voltage forcing)	OL	
2	8	L[35]-B_{15}	HDR active (Excitation voltage reverse)	HDR	
3	1	L[35]-B_{16}	APO Active	APO	
3	2	L[35]-B_{17}	50/60 Hz setting active	60HZ	
3	3	L[35]-B_{18}	Reserved (not active)	DP	
3	4	L[35]-B_{19}	Reserved (not active)	PMM	
3	5	L[35]-B_{20}	Droop active	DROP	
3	6	L[35]-B_{21}	LAM active	LAM	
3	7	L[35]-B_{22}	Autotuning active	AUTO	
3	8	L[35]-B_{23}	Use Autotuning parameters	UPAR	
4	1	L[35]-B_{24}	Reserved (not active)	VM	Also PGN65000 - SPN2527
4	2	L[35]-B_{25}	Reserved (not active)	ERRVM	Also PGN65000 - SPN2527
4	3	L[35]-B_{26}	Reserved (not active)	PFR	
4	4	L[35]-B_{27}	Reserved (not active)	VAR	
4	5	L[35]-B_{28}	Reserved (not active)	ERRPF	Also PGN65028 - SPN2519
4	6	L[35]-B_{29}	Reserved (not active)	IN1	
4	7	L[35]-B_{30}	Reserved (not active)	IN2	
4	8	L[35]-B_{31}	Reserved (not active)	IN3	
5	1÷8	L[54]	Device Temperature	TEMP	SPN 520208
6	1÷8	-	Reserved		
7-8	1÷8	-	Reserved		

PGN 65287 - GENERATOR AUXILIARY BASIC AC QUANTITIES: GAUXAC(x4)
Transmission repetition rate: 100 ms
Data length: 8
Data page: 0
PDU format: 255
PDU specific: 07
Default priority: 3
Parameter group number: 65,287 ($00FF07_{16}$)

Byte:	Description	SPN	Ref. Std.
1-2	Reserved		
3-4	Generator Auxiliary AC RMS Voltage	520220	
5-6	Generator Auxiliary AC Frequency	520219	
7-8	Reserved		

PGN 65312 (PROPRIETARY) CONFIGURABLE DATA
Transmission repetition rate: 100 ms
Data length: 8
Data page: 0
PDU format: 255
PDU specific: 32
Default priority: 3
Parameter group number: 65,312 ($00FF20_{16}$)

Byte:	Description	SPN	Ref. Std.
1-4	Configurable data 1 = value of A[{P(125) A(250) **`Can_Broadcast`**}] (x5)	520216	
5-8	Configurable data 2 = value of A[{P(125) A(250) **`Can_Broadcast`**} + 2] (x5)	520217	

Selection of values of two consecutive memory registers to broadcast is made by setting parameter (E^2PROM stored) P[125] A[250] **`CAN_Broadcast`** with the address of the first of two.
By default P[125] A[250] **`CAN_Broadcast`** = 490 then PGN63512 broadcasts as “Configurable data 1” the register value at address A[490] and as “Configurable data 2” that at address A[492]

6.2 Proprietary Destination Specific Messages - Parameter Group Definitions

In order to perform the action of setting the generator voltage (in stand alone applications) or controlling the reactive power exchanged with the AC bus (parallel of generators or generator in parallel with the grid) the setpoint of **MxKs** Digital Regulator can be modified, with a programmable variation range, by properly setting the value of operational location #7 address A[414] **VEXT_RAM**

The overall variation range is programmable through parameter P[29] (address A[58]) **VEXT_Gain** (External Voltage Operative Range); by default P[29] value is set to give a variation range of ±14%

To transmit this setpoint modification to a specific generator, its node address in the CAN network must be known, and the proprietary PDU1 message for such Destination Address will be used.

The proprietary message used for this purpose has the following structure:

Priority			R	P	PDU Format								Destination Address							
3			0	0	239															
0	1	1	0	0	1	1	1	0	1	1	1	1	1	1						
0	C				E				F				$D0_{16}$÷EA_{16}							
					61184								208÷234							

PGN 61184 (PROPRIETARY) - REAL TIME CONTROLS - RTC
Transmission repetition rate: 100ms
Data length: 8
Data page: 0
PDU format: 239
Destination Address: 208÷234 (default value 210, not recommended 220, 230 and 234, see. chap. 4.1)
Default priority: 3
Parameter group number: 61,184 ($00EFxx_{16}$)

Byte:	Description	SPN	Ref. Std.
1-2	Voltage Setpoint Modification Percentage	520196	
3-4	Configuration option selection (0 if not used)		
5-8	Not Used (0)		

VOLTAGE SETPOINT MODIFICATION PERCENTAGE (‰)

Description: Voltage Setpoint Modification Percentage Relative to Operative Range of External Voltage
Data Length: 2 bytes
Resolution: 1‰ / bit
Offset: -1000
Minimun: 0
Maximun: 2000
Unit: ‰

⚠	At system reset the initial value is that of default corresponding to the the unmodified set point value.

6.3 Proprietary Commands and Requests - Parameter Group Definitions

6.3.1 Introduction

The J1939 custom services must allow to read and write the **MxKs** Digital Regulator functional parameters, stored in volatile and in non-volatile memory, similarly to the Modbus 03_{16} (*Read Holding Registers*) and 10_{16} (*Write Multiple Registers*) implemented and used for these functions.
Considering that the ModBus is a logical protocol and therefore releasable from the physical support on which it is conveyed, it was streamlined the development, validation and maintenance process by implementing the same services *Read Holding Registers* and *Write Multiple Registers* also on CAN Bus as J1939 custom services.
This solution have the advantage of standardizing the user experience as the same registers will be made equally accessible and indifferently to the communication port.

Write Parameter
Ref. Appendix D: Parameters List (E^2PROM map)

1. Write Command (sent on bus): (header_WRITE, Parameter number, Parameter value)
2. **MxKs** reply (on bus):
   a. (header_WRITE, Parameter number) if value has been stored
   b. (header_WRITE, Exception Code) if an error is occurred

Read Parameter or Memory Location
Ref. Appendix D: Parameters List (E^2PROM map) and Appendix E: RAM map

1. Read Command (sent on bus): (header_READ, Parameter number)
2. **MxKs** reply (on bus):
   a. (header_READ, Parameter number, Parameter value) if value has been found
   b. (header_READ, Exception Code) if an error is occurred

6.3.2 ModBus Services available

All parameters are expressed on 32 bits, that is on 2 Modbus registers: in compliance to Modbus specification, every single parameter is wrotten by the Write Multiple Registers service (ModBus Code 10_{16})

6.3.3 ModBus Over CAN J1939

As the write service would had a length exceeding 8 bytes, to avoid sending multiple messages (risking to congest the bus without obvious advantages), the modbus messages mapped to CAN has been contracted by writing a single parameter (32-bit) at a time and then by considering fixed the ModBus fields *Quantity of Registers* (2) and *Byte Count* (4). For the same reason CRC is not used (the control and error handling are intrinsic in the CAN) and for consistency it is also eliminated from the read messages. The messages become:

Simplified Write Request “ModBus over CAN” (from master to **MxKs** device)

Request Function	1 Byte	Fixed 0x10
Starting Address	2 Bytes	Variable
Register Values	4 Bytes	Variable
	TOT 7 Bytes	

Simplified Write Reply “ModBus over CAN” without error (from **MxKs** device to master)

Request Function	1 Byte	Fixed 0x10
Starting Address	2 Bytes	Variable
	TOT 3 Bytes	

Simplified Write Reply “ModBus over CAN” with error (from **MxKs** device to master)

Request Function	1 Byte	Fixed 0x90
Error Code	1 Bytes	01, 02, 03 or 04
	TOT 2 Bytes	

Simplified Read Request “ModBus over CAN” (from master to **MxKs** device)

Request Function	1 Byte	Fixed 0x03
Starting Address	2 Bytes	Variable
	TOT 3 Bytes	

Simplified Read Reply “ModBus over CAN” without error (from **MxKs** device to master)

Request Function	1 Byte	Fixed 0x03
Register values	4 Bytes	Variable
	TOT 5 Bytes	

Simplified Read Reply "ModBus over CAN" with error (from **MxKs** device to master)

Request Function	1 Byte	Fixed 0x83
Error Code	1 Byte	01, 02, 03 or 04
	TOT 2 Bytes	

6.3.4 Error Codes

Error code	Description
01	Invalid address
02	Write to read only value
03	Value out of range
04	Failed to write
06-255	Reserved for future use

6.3.5 CAN J1939 Proprietary Read and Write Messages

Keeping in mind that the J1939 standard foresees that the first 3 bits of the message ID are used, on a physical level, to determine the priority (in the event of a collision on the bus, the message with the lower ID takes precedence, maximum priority is defined by the first 3 bits of the message equal to 0), IDs with lower priority (ie, higher IDs values) than standard messages are assigned to ***Write*** (Parameter) and ***Read*** (Parameter or Memory Location) messages: **$ID_{R/W}$=6 (110_2)**.
As the **MxKs** Digital Regulator is a slave device, it will sent the reply message defined in this section **only following a master request** then to the node that sent the command: from the the peer-to-peer communication side, it will transmit the messages, already getting the information about the master Source Adrress.
For these parameters group the **Data Page bit is set to 1** to permit a quick discard by other devices connected on the bus not interested to these messages and to distinguish them from the real time voltage control requests

PDU Format:

- 0xF0 or 0x10 multiple writing broadcast
- 0x00 or 0x10 peer to peer writing whith destination address is embedded in PDU Specific
- 0x00 or 0x03 peer to peer reading whith destination address is embedded in PDU Specific
- - broadcast readings cannot exist

PDU Specific:

- in the transmission from master to **MxKs**, it is the CAN address(2) of the **MxKs** (value 208÷234, default value 210 = 0xD2)
- in the transmission from **MxKs** to master (reply to a master request) it is the master Source Address

Source Address:

- in the transmission from master to **MxKs**, it is the CAN address of the master
- in the transmission from **MxKs** to master, it is the CAN address(2) of the **MxKs** (value 208÷234, default value 210 = 0xD2)

Based on the above considerations, the following message IDs are defined where default values are considered for **MxKs** (Priority 0b110, Extended data page 0, Data page 1, Source address 210=0xD2) while the Master Source Address, just by way of example is 39=0x27)

1) multiple broadcast writing: 110 0 1 11110000 00000000 00000000 → 0x19F0D227
2) peer to peer writing: 110 0 1 00010000 00000001 00000000 → 0x1910D227
3) peer to peer reading: 110 0 1 00000011 11010010 00100111 → 0x1903D227

The message IDs of the replies will have PDU Specific and Target Address reversed.
Broadcast services have no answer.

PGN 1700050 (PROPRIETARY BROADCAST) AND 1642706 (PROPRIETARY PEER TO PEER) WRITE PARAMETER
Transmission repetition rate: Once
Data length: 8
Data page: 1
PDU format: 240 ($F0_{16}$ broadcast) or 16 (10_{16} peer to peer)
PDU specific: 210 ($D2_{16}$)
Default priority: 6
Parameter group number: 1700050 ($19F0D2_{16}$ broadcast) or 1642706 ($1910D2_{16}$ peer to peer)

Priority			Reserved	Data Page	PDU Format	PDU Specific	Source Address
1	1	0	0	1	8 bit	8 bit	8 bit
1	4 bit						

Broadcast Write

Byte:	Description	SPN	Ref. Std.
1	10_{16}		
2-3	Starting Address		
4-7	Data Values		
8	Unused		

ID	Byte1	Byte2	Byte3	Byte4	Byte5	Byte6	Byte7	Byte8
0x19F0D227	0x10	$RegAdd_H$	$RegAdd_L$	Data3	Data2	Data1	Data0	0xFF

Peer to Peer write request

Byte:	Description	SPN	Ref. Std.
1	10_{16}		
2-3	Starting Address		
4-7	Data Values		
8	Unused		

ID	Byte1	Byte2	Byte3	Byte4	Byte5	Byte6	Byte7	Byte8
0x1910D227	0x10	$RegAdd_H$	$RegAdd_L$	Data3	Data2	Data1	Data0	0xFF

Peer to Peer reply without error

Byte:	Description	SPN	Ref. Std.
1	10_{16}		
2-3	Starting Address		
4-8	Unused		

ID	Byte1	Byte2	Byte3	Byte4	Byte5	Byte6	Byte7	Byte8
0x191027D2	0x10	$RegAdd_H$	$RegAdd_L$	0xFF	0xFF	0xFF	0xFF	0xFF

Peer to Peer reply with error

Byte:	Description	SPN	Ref. Std.
1	90_{16}		
2	Error Code		
3-8	Unused		

ID	Byte1	Byte2	Byte3	Byte4	Byte5	Byte6	Byte7	Byte8
0x191027D2	0x90	Err. Code	0xFF	0xFF	0xFF	0xFF	0xFF	0xFF

In all cases, just by way of example: Master Source Address=39 (27_{16})

PGN 1639378 (PROPRIETARY) READ VALUE
Transmission repetition rate: Once
Data length: 8
Data page: 1
PDU format: 3
PDU specific: 210 ($D2_{16}$)
Default priority: 6
Parameter group number: 1639378 ($1903D2_{16}$)

Read Holding Register service, by its intrinsic nature, is peer to peer only.

Priority			Reserved	Data Page	PDU Format	PDU Specific	Source Address
1	1	0	0	1	8 bit	8 bit	8 bit
1	4 bit						

Peer to Peer read request

Byte:	Description	SPN	Ref. Std.
1	03_{16}		
2-3	Data Address		
4-8	Unused		

ID	Byte1	Byte2	Byte3	Byte4	Byte5	Byte6	Byte7	Byte8
0x1903D2 27	0x03	$RegAdd_H$	$RegAdd_L$	0xFF	0xFF	0xFF	0xFF	0xFF

Peer to Peer reply without error

Byte:	Description	SPN	Ref. Std.
1	03_{16}		
2-3	Data Address		
4-7	Data Value		
8	Unused		

ID	Byte1	Byte2	Byte3	Byte4	Byte5	Byte6	Byte7	Byte8
0x190327D2	0x03	$RegAdd_H$	$RegAdd_L$	Data3	Data2	Data1	Data0	0xFF

Peer to Peer reply with error

Byte:	Description	SPN	Ref. Std.
1	83_{16}		
2	Error Code		
3-8	Unused		

ID	Byte1	Byte2	Byte3	Byte4	Byte5	Byte6	Byte7	Byte8
0x190327D2	0x83	Err. Code	0xFF	0xFF	0xFF	0xFF	0xFF	0xFF

In all cases, just by way of example: Master Source Address=39 (27_{16})

7 PARAMETER DEFINITIONS

The parameter definitions are listed in numerical order by SPN

7.1 Standard Parameter Definitions

SPN 623 RED STOP LAMP
Description: Lamp used to relay trouble code information of a so severe condition to require genset stopping
00 - Lamp Off
01 - Lamp On
10 - Not Available or Not Installed
11 - Not Available or Not Installed
Data Length: 2 bits
Data Range: 0 to 3
Reference: PGN 65,526 SAE J1939-73

SPN 624 AMBER WARNING LAMP
Description: Lamp used to relay trouble code information that is reporting a problem not requiring an immediate stop
00 - Lamp Off
01 - Lamp On
10 - Not Available or Not Installed
11 - Not Available or Not Installed
Data Length: 2 bits
Data Range: 0 to 3
Reference: PGN 65,526 SAE J1939-73

SPN 987 PROTECT LAMP
Description: Lamp used to relay trouble code information reporting a system problem most probably not electronic related.
00 - Lamp Off
01 - Lamp On
10 - Not Available or Not Installed
11 - Not Available or Not Installed
Data Length: 2 bits
Data Range: 0 to 3
Reference: PGN 65,526 SAE J1939-73

SPN 1213 MALFUNCTION INDICATOR LAMP
Description: Lamp used to relay only emissions-related trouble code information.
00 - Lamp Off
01 - Lamp On
10 - Not Applicable
11 - Not Available or Not Installed
Data Length: 2 bits
Data Range: 0 to 3
Reference: PGN 65,526 SAE J1939-73

SPN 1214 SUSPECT PARAMETER NUMBER (SPN)
Description: Number used to identify the item for which diagnostics are being reported.
Data Length: 19 bits
Resolution: 1 SPN/bit
Data range: 0 to 524,287
Reference: PGN 65,526 SAE J1939-73

SPN 1215 FAILURE MODE IDENTIFIER (FMI)
Description: FMI defines the type of failure detected in the subsystem identified by an SPN.
Data Length: 5 bits
Resolution: 1 FMI/bit
Data range: 0 to 31
Reference: PGN 65,526 SAE J1939-73

SPN 1216 Occurrence Count (OC)
Description: number of times a fault has been independently detected.
Data Length: 7 bits
Resolution: 1 occurrence count/bit
Data range: 0 to 126 (127 is reserved for indicating not available)
Reference: PGN 65,526 SAE J1939-73

SPN 1706 SPN Conversion Method (CM)
Description: When equal to a zero, the SPN should be converted as it is defined in this document.
0 - convert DM SPNs per definition in chapter 5.5 (Active Diagnostic Troubles Codes DM1)
1 - convert DM SPNs for implementations prior to the adoption of the recommended setting as zero
Data Length: 1 bit
Resolution: Not Applicable
Reference: PGN 65,526 SAE J1939-73

SPN 3038 Flash Malfunction Indicator Lamp
Description: Capability to flash the MIL.
00 - Slow Flash (1 Hz, 50% duty cycle)
01 - Fast Flash (2 Hz or faster, 50% duty cycle)
10 - Not Applicable
11 - Unavailable / Do Not Flash
Data Length: 2 bits
Data Range: 0 to 3
Reference: PGN 65,526 SAE J1939-73

SPN 3039 Flash Red Stop Lamp
Description: Capability to flash the Red Stop Lamp.
00 - Slow Flash (1 Hz, 50% duty cycle)
01 - Fast Flash (2 Hz or faster, 50% duty cycle)
10 - Reserved
11 - Unavailable / Do Not Flash
Data Length: 2 bits
Data Range: 0 to 3
Reference: PGN 65,526 SAE J1939-73

SPN 3040 Flash Amber Warning Lamp
Description: Capability to flash the Amber Warning Lamp.
00 - Slow Flash (1 Hz, 50% duty cycle)
01 - Fast Flash (2 Hz or faster, 50% duty cycle)
10 - Reserved
11 - Unavailable / Do Not Flash
Data Length: 2 bits
Data Range: 0 to 3
Reference: PGN 65,526 SAE J1939-73

SPN 3041 Flash Protect Lamp
Description: Capability to flash the Protect Lamp.
00 - Slow Flash (1 Hz, 50% duty cycle)
01 - Fast Flash (2 Hz or faster, 50% duty cycle)
10 - Reserved
11 - Unavailable / Do Not Flash
Data Length: 2 bits
Data Range: 0 to 3
Reference: PGN 65,526 SAE J1939-73

SPN 3380 Generator Excitation Field Voltage
Description: Generator excitation voltage measured at excitation field
Data Length: 2 bytes
Resolution: 0.05V/bit, -1606 offset
Data range: -1606 to 1606,75 V
Reference: PGN 64,934 SAE J1939-75

SPN 3381 GENERATOR EXCITATION FIELD CURRENT
Description: Generator excitation current measured at excitation field
Data Length: 2 bytes
Resolution: 0.05 A/bit, 0 offset
Data range: 0 to 3212.75 A
Reference: PGN 64,934 SAE J1939-75

SPN 3382 GENERATOR OUTPUT VOLTAGE BIAS PERCENTAGE
Description: voltage bias percentage of the generator output voltage being requested by external to the voltage regulator measured from the generator nominal setpoint
Data Length: 2 bytes
Resolution:
Data range:
Reference: PGN 64,934 SAE J1939-75

SPN 2436 - GENERATOR AVERAGE AC FREQUENCY
Description: Average AC frequency measured at the generator output.
Data Length: 2 bytes
Resolution: 1/128 Hz/bit, 0 offset
Data Range: 0 to 501.9921875 Hz
Reference: PGN 65,030 SAE J1939-75

SPN 2437 - GENERATOR PHASE A AC FREQUENCY
Description: AC frequency measured at the generator phase A output.
Data Length: 2 bytes
Resolution: 1/128 Hz/bit, 0 offset
Data Range: 0 to 501.9921875 Hz
Reference: PGN 65,027 SAE J1939-75

SPN 2438 - GENERATOR PHASE B AC FREQUENCY
Description: AC frequency measured at the generator phase B output.
Data Length: 2 bytes
Resolution: 1/128 Hz/bit, 0 offset
Data Range: 0 to 501.9921875 Hz
Reference: PGN 65,024 SAE J1939-75

SPN 2439 - GENERATOR PHASE C AC FREQUENCY
Description: AC frequency measured at the generator phase C output.
Data Length: 2 bytes
Resolution: 1/128 Hz/bit, 0 offset
Data Range: 0 to 501.9921875 Hz
Reference: PGN 65,021 SAE J1939-75

SPN 2440 - GENERATOR AVERAGE LINE-LINE AC RMS VOLTAGE
Description: Average Line to Line RMS voltage measured at the generator output.
Data Length: 2 bytes
Resolution: 1 V/bit, 0 offset
Data Range: 0 to 64,255 Volts
Reference: PGN 65,030 SAE J1939-75

SPN 2441 - GENERATOR PHASE AB LINE-LINE AC RMS VOLTAGE
Description: Line to Line RMS voltage measured at the generator phase AB output.
Data Length: 2 bytes
Resolution: 1 V/bit, 0 offset
Data Range: 0 to 64,255 Volts
Reference: PGN 65,027 SAE J1939-75

SPN 2442 - GENERATOR PHASE BC LINE-LINE AC RMS VOLTAGE
Description: Line to Line RMS voltage measured at the generator phase BC output.
Data Length: 2 bytes
Resolution: 1 V/bit, 0 offset
Data Range: 0 to 64,255 Volts
Reference: PGN 65,024 SAE J1939-75

SPN 2443 - GENERATOR PHASE CA LINE-LINE AC RMS VOLTAGE
Description: Line to Line RMS voltage measured at the generator phase CA output.
Data Length: 2 bytes
Resolution: 1 V/bit, 0 offset
Data Range: 0 to 64,255 Volts
Reference: PGN 65,021 SAE J1939-75

SPN 2444 - GENERATOR AVERAGE LINE-NEUTRAL AC RMS VOLTAGE
Description: The average Line to Neutral AC RMS voltage measured at the Generator output.
Data Length: 2 bytes
Resolution: 1 V/bit, 0 offset
Data Range: 0 to 64,255 Volts
Reference: PGN 65,030 SAE J1939-75

SPN 2445 - GENERATOR PHASE A LINE-NEUTRAL AC RMS VOLTAGE
Description: Line to Neutral RMS voltage measured at the generator phase A output.
Data Length: 2 bytes
Resolution: 1 V/bit, 0 offset
Data Range: 0 to 64,255 Volts
Reference: PGN 65,027 SAE J1939-75

SPN 2446 - GENERATOR PHASE B LINE-NEUTRAL AC RMS VOLTAGE
Description: Line to Neutral RMS voltage measured at the generator phase B output.
Data Length: 2 bytes
Resolution: 1 V/bit, 0 offset
Data Range: 0 to 64,255 Volts
Reference: PGN 65,024 SAE J1939-75

SPN 2447 - GENERATOR PHASE C LINE-NEUTRAL AC RMS VOLTAGE
Description: Line to Neutral RMS voltage measured at the generator phase C output.
Data Length: 2 bytes
Resolution: 1 V/bit, 0 offset
Data Range: 0 to 64,255 Volts
Reference: PGN 65,021 SAE J1939-75

SPN 2448 - GENERATOR AVERAGE AC RMS CURRENT
Description: Average RMS current measured at the generator output.
Data Length: 2 bytes
Resolution: 1 A/bit, 0 offset
Data Range: 0 to 64,255 Amps
Reference: PGN 65,030 SAE J1939-75

SPN 2449 - GENERATOR PHASE A AC RMS CURRENT
Description: RMS current measured at the generator phase A output.
Data Length: 2 bytes
Resolution: 1 A/bit, 0 offset
Data Range: 0 to 64,255 Amps
Reference: PGN 65,027 SAE J1939-75

SPN 2450 - GENERATOR PHASE B AC RMS CURRENT
Description: RMS current measured at the generator phase B output.
Data Length: 2 bytes
Resolution: 1 A/bit, 0 offset
Data Range: 0 to 64,255 Amps
Reference: PGN 65,024 SAE J1939-75

SPN 2451 - GENERATOR PHASE C AC RMS CURRENT
Description: RMS current measured at the generator phase C output.
Data Length: 2 bytes
Resolution: 1 A/bit, 0 offset
Data Range: 0 to 64,255 Amps
Reference: PGN 65,021 SAE J1939-75

SPN 2452 - GENERATOR TOTAL REAL POWER
Description: Total real power delivered by the generator.
Data Length: 4 bytes
Resolution: 1 W/bit, -2000000000 offset
Data Range: -2000000000 to +2211081215 Watts
Reference: PGN 65,029 SAE J1939-75

SPN 2453 - GENERATOR PHASE A REAL POWER
Description: The real power delivered by phase A of the generator.
Data Length: 4 bytes
Resolution: 1 W/bit, -2000000000 offset
Data Range: -2000000000 to +2211081215 Watts
Reference: PGN 65,026 SAE J1939-75

SPN 2456 - GENERATOR TOTAL REACTIVE POWER
Description: The total reactive power delivered by the generator
Data Length: 4 bytes
Resolution: 1 VAr/bit, -2000000000 offset
Data Range: -2000000000 to +2211081215 VAr
Reference: PGN 65,028 SAE J1939-75

SPN 2457 - GENERATOR PHASE A REACTIVE POWER
Description: The reactive power delivered by phase A of the generator
Data Length: 4 bytes
Resolution: 1 VAr/bit, -2000000000 offset
Data Range: -2000000000 to +2211081215 VAr
Reference: PGN 65,025 SAE J1939-75

SPN 2460 - GENERATOR TOTAL APPARENT POWER
Description: The total apparent power delivered by the generator.
Data Length: 4 bytes
Resolution: 1 VA/bit, -2000000000 offset
Data Range: -2000000000 to +2211081215 VA
Reference: PGN 65,029 SAE J1939-75

SPN 2461 - GENERATOR PHASE A APPARENT POWER
Description: The apparent power delivered by phase A of the generator.
Data Length: 4 bytes
Resolution: 1 VA/bit, -2000000000 offset
Data Range: -2000000000 to +2211081215 VA
Reference: PGN 65,026 SAE J1939-75

SPN 2464 - GENERATOR OVERALL POWER FACTOR
Description: The average power factor of the generator.
Data Length: 2 bytes
Resolution: 1/16384 per bit, -1 offset
Data Range: -1.00000 to 2.921813965
Operational Range: -1.00000 to 1.00000
Reference: PGN 65,028 SAE J1939-75

SPN 2465 - GENERATOR PHASE A POWER FACTOR
Description: The power factor of phase A of the generator.
Data Length: 2 bytes
Resolution: 1/16384 per bit, -1 offset
Data Range: -1.00000 to 2.921813965
Operational Range: -1.00000 to 1.00000
Reference: PGN 65,025 SAE J1939-75

SPN 2518 - GENERATOR OVERALL POWER FACTOR LAGGING
Description: Lead/lag status for generator average power factor.
00 - Leading
01 - Lagging
10 - Error
11 - Not Available or Not Installed
Data Length: 2 bits
Data Range: 0 to 3
Reference: PGN 65,028 SAE J1939-75

SPN 2519 - GENERATOR PHASE A POWER FACTOR LAGGING
Description: Lead/lag status for generator phase A power factor.
00 - Leading
01 - Lagging
10 - Error
11 - Not Available or Not Installed
Data Length: 2 bits
Data Range: 0 to 3
Reference: PGN 65,025 SAE J1939-75

7.2 Proprietary Parameter Definitions

Standard SAE J1939-73 leaves 4096 Suspect Parameter Numbers for proprietary diagnostics, the range admitted is from 520192 ($7F000_{16}$) to 524287 ($7FFFF_{16}$); all SPNs relative to **MxKs** digital regulators are defined in compliance to restrictions for the SPNs for Proprietary Diagnostics (available in APPENDIX F of such standard)

SPN 520192 - STATUS
Description: Status of Voltage Regulation Device (AVR)
Data Length: 2 bytes
Data Range: 0 to 65535
Suspect Parameter Number: 520192
Reference: PGN 65,283 PROPRIETARY

SPN 520194 - ALARMS
Description: Active Alarms
Data Length: 2 bytes
Data Range: 0 to 65535
Suspect Parameter Number: 520194
Reference: PGN 65,281 PROPRIETARY

SPN 520196 - VOLTAGE SETPOINT MODIFICATION PERCENTAGE (‰)
Description: Voltage Setpoint Modification Percentage Relative to Operative Range of External Voltage
Data Length: 2 bytes
Resolution: 1‰ / bit, -1000 offset
Data Range: 0 to 2000 ‰
Suspect Parameter Number: 520196
Reference: PGN 61,184 PROPRIETARY

SPN 520208 - DEVICE TEMPERATURE
Description: Measured temperature of Voltage Regulation Device (AVR)
Data Length: 1 byte
Resolution: 1 deg C/bit , -40 deg C offset
Data Range: -40 to 210 deg C
Suspect Parameter Number: 520208
Reference: PGN 65,285 PROPRIETARY

SPN 520216 - CONFIGURABLE DATA 1
Description: Content replication of A[{P(125) A(250) Can_Broadcast}] (x11)
Data Length: 4 byte
Data Range: subset consists of unsigned integers that represent either actually integers or bit configurations, however most represents values expressed in single precision floating point.
Suspect Parameter Number: 520216
Reference: PGN 65,312 PROPRIETARY

SPN 520217 - CONFIGURABLE DATA 2
Description: Content replication of A[{P(125) A(250) Can_Broadcast} + 2] (5)
Data Length: 4 byte
Data Range: subset consists of unsigned integers that represent either actually integers or bit configurations, however most represents values expressed in single precision floating point.
Suspect Parameter Number: 520217
Reference: PGN 65,312 PROPRIETARY

SPN 520219 - GENERATOR AUXILIARY AC FREQUENCY(4)
Description: AC frequency measured at the generator Auxiliary output.
Data Length: 2 bytes
Resolution: 1/128 Hz/bit, 0 offset
Data Range: 0 to 501.9921875 Hz
Reference: PGN 65,287 PROPRIETARY

SPN 520220 - GENERATOR AUXILIARY AC RMS VOLTAGE(4)
Description: RMS voltage measured at the generator Auxiliary output.
Data Length: 2 bytes
Resolution: 1 V/bit, 0 offset
Data Range: 0 to 64,255 Volts
Reference: PGN 65,287 PROPRIETARY

ANNEX A: Parameters map(3)

Ref. PGNs (Proprietary): 1700050 (Broadcast Write), 1642706 (Peer to Peer Write) 1639378 (Read Value) Parameter
For project needs, all parameters are expressed on 32 bits, a subset of them consists of unsigned integers (Type Uint32) that represent either actually integers or bit configurations, however most represents values expressed in single precision floating point (Type single)

P[#]	Address	Description	ModBus Register Name	Type	Default	Max.	Min.	Unit
0	0	Firmvare release	FW_REV	Uint32	Fw. defined	2^{32}-1	0	NA
1	2	Software Configuration	FW_CONFIG	Uint32	Fw. defined	2^{32}-1	0	NA
2	4	Serial Number (32 bit)	AVR_SN	Uint32	0	2^{32}-1	0	NA
3	6	Calibration sensing channel 1 (phase U)	PUV_ADCSclng	Float	0,3250149		0	NA
4	8	Calibration sensing channel 2 (phase V)	PVV_ADCSclng	Float	0,3250149		0	NA
5	10	Calibration sensing channel 3 (phase W)	PWV_ADCSclng	Float	0,3250149		0	NA
6	12	Calibration supply channel	AUXV_ADCSclng	Float	0,2383394		0	NA
7	14	Reserved (unused)	Reserved	Float	0		0	NA
8	16	Free for future use (unused)	FREE_8	Uint32	0	2^{32}-1	0	NA
9	18	Free for future use (unused)	FREE_9	Uint32	0	2^{32}-1	0	NA
16..20	32..40	Free for future use (unused)	FREE_16..FREE20	Uint32	0	2^{32}-1	0	NA
21	42	Voltage setpoint in case of LOS	LOS_SftyVltgSetpt	Float	100	1000	0	V
22	44	Free for future use (unused)	FREE_22	Uint32	0	2^{32}-1	0	NA
23	46	Calibration current channel (CT)	PUC_ADCSclng	Float	0,003798	500	0	A
25	50	Current scaling for CAN	CURR_CANSclng	Float	1	2	0	NA
26	52	Free for future use (unused)	FREE_26	Uint32	0	2^{32}-1	0	NA
27	54	Rated reactive current scaling	DROOP_NomRctvCurr	Float	3	5	0	A
28	56	Free for future use (unused)	FREE_28	Uint32	0	2^{32}-1	NA	NA
29	58	External Voltage operative range	VEXT_Gain	Float	0,14	1	0	NA
30	60	External Voltage channel Gain(7)	VEXT_Sclng	Float	0,00048828		0	NA
31	62	External Voltage channel Offset(7)	VEXT_Ofst	Float	-1			NA
32	64	External Voltage Time constant	VEXT_LPFTau	Float	0,05		0	s
33	66	Free for additional Vext param.	FREE_33	Uint32	0	2^{32}-1	0	NA
34	68	Free for additional Vext param.	FREE_34	Uint32	0	2^{32}-1	0	NA
35	70	Configuration flags part 1	CONFIGURATION_1	Uint32	Fw. defined	2^{32}-1	0	NA
36	72	Configuration flags part 2	CONFIGURATION_2	Uint32	6168	2^{32}-1	0	NA
37	74	Voltage Regulator Proportional Gain	USR_KP	Float	0,5		0	NA
38	76	Voltage regulator Integral Time constant	USR_Ti	Float	0,2		0	s
39	78	Voltage regulator Derivative Time constant	USR_Td	Float	0,05		0	s
40	80	Voltage reg. Anti wind-up Time constant	USR_Tt	Float	0,1		0	s
41	82	Open loop Excitation RMS voltage	INIT_EXC_VLTG	Float	0		0	V
42	84	Free for future use (unused)	FREE_42	Uint32	0	2^{32}-1	0	NA
43	86	Free for future use (unused)	FREE_43	Uint32	0	2^{32}-1	0	NA
44	88	HDR recovery preset percentage	HDR_Preset	Float	0,5	1	0	%
45	90	Voltage Setpoint (as Trimmer VOLT)	USR_VltgSetpt	Float	231	500	0	V
46	92	Droop Setpoint (as Trimmer DROOP)	USRDROOP_VltgDrop	Float	0,04	1	0	%
47	94	Free for future use (unused)	FREE_47	Uint32	0	2^{32}-1	NA	NA
48	96	Over Exc. Threshold (as Trimmer AMP)	USR_ExcttnTempSetPt	Float	110		0	V
49	98	Excitation thermal model time constant	THERMMDL_TimeCnst	Float	30		0	s
50	100	Over exc. regulator integral time const.	AMPCTRL_PITi	Float	0,1		0	s
51	102	Over exc. regulator proportional gain	AMPCTRL_PIKP	Float	0,75		0	NA
52	104	Free for future use (unused)	FREE_52	Uint32	0	2^{32}-1	0	NA
53	106	Under Excitation Threshold	U_EXC_THRESHOLD	Float	5		0	V
54	108	Stator Overcurrent Module (in p.u.)	OVERCURRENT	Float	5		0	A
55	110	C.T. ratio	CT_RATIO	Uint32	1		1	NA
56	112	Short circuit validation time	SCC_VldtnTime	Float	0,5		0	s
57	114	Short Circuit trip delay	SCC_SCROnTimePr	Float	4,5	100	0	s
58	116	Reserved (unused)	Reserved	Uint32	0	2^{32}-1	0	s
59	118	Free for future use (unused)	FREE_59	Uint32	0	2^{32}-1	0	NA
60	120	Setpoint rate limitation	SETPT_MaxRate	Float	200	500	0	V/s
61	122	Start-up setpoint limitation	START_InitSetpt	Float	0,4	1	0	%
62	124	Start-up setpoint rate limitation	START_MaxRate	Float	100	500	0	V/s
63	126	Start-up full excitation additional time	START_FullExc_Time	Uint32	0	TBD	0	ms

Tab. A1-A: Settings parameters for regulator setting (Part A)

P[#]	Address	Description	ModBus Register Name	Type	Default	Max.	Min.	Unit
64	128	Under frequency threshold	VF_FreqDrop	Float	0,04	1	0	%
65	130	Start-up V/f slope	START_SLOPE	Float	1,0379		0	%V/%Hz
66	132	Normal V/f slope (also LAMS m1)	VF_VFDrop	Float	1,0379		0	%V/%Hz
67	134	LAMS V/f slope (m3)	LAM_VF3VFDrop	Float	15		0	%V/%Hz
68	136	LAMS delay	LAM_T2SetlngTime	Float	10		0	s
69	138	LAMS Setpoint slope	LAM_DeltFreqDrop	Float	0,001			Hz/s
70	140	LAMS to standard V/f threshold	LAM_VF1FreqDrop	Float	0,15	1	0	%
71	142	LAMS end threshold	LAM_VF2FreqDrop	Float	0,04	1	0	%
72	144	LAMS exit time	LAM_T1WaitgTime	Float	0,3		0	s
73	146	LAMS secondary V/f slope (m2)	LAM_VF2VFDrop	Float	0,2139		0	%V/%Hz
74	148	LAMS threshold	LAM_VF3FreqDrop	Float	0,03	1	0	%
75	150	Over speed threshold	OVERSPEED	Float	0,1	1	0	%
76	152	Supply OV regul. integral time constant	AUX_OVC_Ti	Float	0,2		0	NA
77	154	Supply OV regul. proportional gain	AUX_OV_KP	Float	0,5		0	NA
78	156	Free for future use (unused)	FREE_78	Uint32	0	2^{32}-1	0	NA
79	158	Cosphi identification threshold	COS_PHI_TH	Float	0,02	1	0	NA
80	160	FOC currents identification threshold	I_MIN_TH	Float	0,05	5	0	A
81	162	Reserved (unused)	Reserved	Float				rad
82	164	Reserved (unused)	Reserved	Float	0			rad
83..88	166..176	Free for future use (unused)	FREE_83..FREE_88	Uint32	0	2^{32}-1	0	NA
89	178	StartUp Alarm blind time	Alarm_Blind_Time	Float	2,5		0	s
90	180	ShutDown EEPROM debounce	ShutDownThreshold	Uint32	1000	NA	NA	s/10000
91	182	Shutdown supply minimum voltage	ShutDownMinAux	Float	50	NA	NA	V
92	184	Free for future use (unused)	FREE_92	Uint32	0	2^{32}-1	0	NA
93	186	Autotuning regressor lower time const.	Gmd_TauSlow	Float	0,42			s
94	188	Autotuning regressor upper time const.	Gmd_TauFast	Float	0,35			s
95	190	Gmd_K @ autotuning switches disabled	Gmd_K	Float	3			NA
96	192	Autotuning estimated Proportional gain	Kp_ATUNE	Float	0,016	0,144	7,229	NA
97	194	Autotuning estimated Integral Gain	Ki_ATUNE	Float	0,0811	0,64	29,995	s
98	196	Autotuning estimated Derivative Gain	Kd_ATUNE	Float	0,001039	0,0061	0,4359	1/s
99..104	198..208	Free for future use (unused)	FREE_99..FREE104	Uint32	0	2^{32}-1	0	NA
105	210	Injected disturb period	disturbPeriod	Float	20			s
106	212	Start-up disturb injection delay	disturbDelay	Float	30			s
107	214	Free for future use (unused)	FREE_107	Uint32	0	2^{32}-1	0	NA
108	216	Free for future use (unused)	FREE_108	Uint32	0	2^{32}-1	0	NA
109	218	Injected disturb amplitude	stepDV	Float	0			V
110	220	Gmd_K for small alternators autotuning	Gmd_K_S	Float	10	NA	NA	NA
111	222	Gmd_K for medium altern. autotuning	Gmd_K_M	Float	5	NA	NA	NA
112	224	Gmd_K for large alternators autotuning	Gmd_K_L	Float	3	NA	NA	NA
113..115	226..230	Free for future use (unused)	FREE_113..FREE_115	Uint32	0	2^{32}-1	0	NA
116	232	APO Setting	APO_SELECT	Uint32	184774630	2^32	0	NA
117	234	APO Delay	APO_DELAY	Float	0		0	s
118	236	Reserved (unused)	Reserved	Uint32	0	2^{32}-1	0	NA
119	238	Reserved (unused)	Reserved	Float	0		0	VAR
120	240	Reserved (unused)	Reserved	Float	0,8	1	0	NA
121	242	Reserved (unused)	Reserved	Float	0		0	NA
122	244	Reserved (unused)	Reserved	Float	0		0	NA
123	246	Free for future use (unused)	FREE_123	Uint32	0	2^{32}-1	0	NA
124	248	Leading Current Limit	Leading_Current_Limit	Float	-0,2			
125	250	RAM address to broadcast at PGN 65312	CAN_Broadcast	Uint32	490	526	400	NA
126	252	ADDR slave	CAN_address	Uint32	210	234	208	NA
127	254	Checksum	ADD_CSUM	Uint32	Fw. defined	2^32	0	NA

Tab. A1-B: Settings parameters for regulator setting (Part B)

⚠	Data transmitted as payload of proprietary write messages and data received as payload of proprietary read messages are expressed in a hexadecimal format with meaning defined by the field “Type” in Tab. A1-A and A1-B

ANNEX B: Operative variables map(3)

The operative variables map is divided in four sub-sets:

1) PGN (PROPRIETARY) 1639378 (READ VALUE) PARAMETER. Read only registers allocated to address A[402]÷A[412], A[416]÷A[468] and A[474]÷A[526] publish values, on 32 bit, expressed as used in the code (operative variables); a subset of them consists of unsigned integers (Type Uint32) that represent integers values, however most of them represents values expressed in single precision floating point (Type Float).

2) PGN (PROPRIETARY) TBD and PGN (PROPRIETARY) 61184 - REAL TIME CONTROLS - RTC. Special read/write registers allocated respectively to A[400] and A[407] with values expressed as needed by the CAN J1939 messages (Uint32, 4 bytes, representing bit configuration for A[400] and unsigned integer on 16bit for A[414])

3) PGN 65281 (PROPRIETARY) ALARM and PGN 65283 (PROPRIETARY) STATUS· Read-only registers allocated to address A[470] and A[472], with values expressed as needed by the CAN J1939 messages (Uint32, 4 bytes, representing bit configurations), publish respectively **MxKs** configuration status active (otherwise not provided by other J1939 standard PGN) and **MxKs** alarm active

4) PGN J1939 (see table B2). Read only registers at address A[528]÷A[654] consist of unsigned integers expressed on 8, 16 or 32 bit (Type Uint8, Uint16 or Uint32) that represent values as needed by the CAN J1939 messages.

L[#]	Address	Description	ModBus Register Name	Type	Max.	Min.	Unit	PGN	SPN
0	400	Commands (WRITE register)	ADDR_COMMANDS	Uint32	2^{32}-1	0	NA		
1	402	VOLT Trimmer position	VOLTTRIM_ADCOutp	Uint32	4096	0	NA	63312	
2	404	DROOP Trimmer position	DROOPTRIM_ADCOutp	Uint32	4096	0	NA	63312	
3	406	STAB Trimmer position	STABTRIM_ADCOutp	Uint32	4096	0	NA	63312	
4	408	AMP Trimmer position	AMPTRIM_ADCOutp	Uint32	4096	0	NA	63312	
5	410	External potentiometer position	PEXT_ADCOutp	Uint32	4096	0	NA	63312	
6	412	External voltage acquired	VEXT_ADCOutp	Uint32	4096	0	NA	63312	
7	414	Digital External voltage (R/W register)	VEXT_RAM	Uint32	2000	0	‰	61184	
8	416	Voltage setpoint modified by Vext	SETPS_VltgSetPt	Float		0	V	65312	
9	418	Voltage setpoint modified by frequency	VSE_VltgSetpt	Float		0	V	65312	
10	420	Setpoint reduction by Supply Overvoltage	OVC_VltgDrop	Float	0		V	65312	
11	422	Setpoint reduction by AMP intervention	AMP_VltgDrop	Float	0		V	65312	
12	424	Setpoint effective	TVS_SnsgnVltgSetpt	Float		0	V	65312	
13	426	Sensing voltage (average value)	MEC_SnsngVltgRMS	Float	465,75	0	V	65312	
14	428	Ch. 1 sensing voltage (150-405V referred)	PU_VltgRMS	Float	465,75	0	V	65312	
15	430	Ch. 2 sensing voltage (150-405V referred)	PV_VltgRMS	Float	465,75	0	V	65312	
16	432	Ch. 3 sensing voltage (150-405V referred)	PW_VltgRMS	Float	465,75	0	V	65312	
17	434	Supply Voltage (measured)	Aux_VltgRMS	Float		0	V	65312	
18	436	Excitation voltage (calculated)	avgExcVltg	Float			V	65312	
19	438	Reserved (unused)	Reserved	Float		0	A	65312	
20	440	Generator Frequency (measured)	AF2P_Freq	Float	112,5	0	Hz	65312	
21..23	442..446	Reserved (unused)	Reserved	Float				65312	
24	448	Channel 1 current (measured)	PU_CurrRMS	Float	5,5	0	A	65312	
25	450	Channel 1 active current (calculated)	RCE_ActvCurrRMS	Float	5,5	-5,5	A	65312	
26	452	Ch. 1 reactive current (calculated)	RCE_ReactvCurrRMS	Float	5,5	-5,5	A	65312	
27	454	Voltage drop (by I_Q and DROOP setting)	DROOPC_VltgSetptDrop	Float	0,1	-0,1	%	65312	
28	456	Voltage Setpoint with droop intervention	TVS_UnlimitedSnsngVltgSetpt	Float		0	V	65312	
29	458	Apparent power (unsigned, calculated(x8))	PU_AppPwr	Float	2561,625	0	VA	65312	
30	460	Active Power (signed, calculated(x8))	PU_ActPwr	Float	2561,625	-2561,625	W	65312	
31	462	Cosφ (calculated(x9))	LAE_CosPhi	Float			NA	65312	
32	464	Reactive Power (signed, calculated(x8))	PU_ReactPwr	Float	2561,625	-2561,625	VAR	65312	
33..34	466..468	Reserved (unused)	Reserved	Float				65312	
35	470	Active Status	STATUS	Uint32	2^{32}-1	0	NA	65283	
36	472	Active Alarms	ALARMS	Uint32	2^{32}-1	0	NA	65281	
37..38	474..476	Free for future use (unused)	FREE_474.. FREE_476	Uint32	2^{32}-1	0	NA	NA	NA
39	478	Autotuning reference model closed loop gain	Gmd_K	Float		0	NA	65312	
40	480	KP_user temporary - Freeze autotuning	Kp_ATUNE_tmp	Float		0	NA	65312	
41	482	KI_PI temporary - Freeze autotuning	Ki_ATUNE_tmp	Float		0	s	65312	
42	484	KD_user temporary - Freeze autotuning	Kd_ATUNE_tmp	Float		0	1/s	65312	
43	486	Effective Proportional Gain	trueKp	Float		0	NA	65312	
44	488	PID Integral Output	PID_Int	Float		0		65312	
45	490	AMP threshold	EXC_RefDsrdVltg	Float		0	V	65312	
46	492	Accumulate heat estimator	avgExcVltgFiltered	Float		0	V	65312	
47	494	Excitation voltage setpoint	rmsExcVltg	Float		0	V	65312	

48	496	Free for future use	FREE_496	Uint32	2^{32}-1	0	NA	NA	NA

Tab. B1-A: Operative variables (Part A)

L[#]	Address	Description	ModBus Register Name	Type	Max.	Min.	Unit	PGN	SPN
49	498	Average Line-to-Line Voltage	AVG_CnctVltg	Float	465,75	0	V	65312	
50	500	Ch1 - Ch2 Line-to-Line Voltage	VuVv_CnctVltg	Float	465,75	0	V	65312	
51	502	Ch2 - Ch3 Line-to-Line Voltage	VvVw_CnctVltg	Float	465,75	0	V	65312	
52	504	Ch3 - Ch1 Line-to-Line Voltage	VwVu_CnctVltg	Float	465,75	0	V	65312	
53	506	Reserved (unused)	Reserved	Float			rad	65312	
54	508	Device temperature	CDSR_Temperature	Float	85	-25	°C	65312	
55..59	510..518	Reserved (unused)	Reserved	Float			°C	65312	
60..63	520..526	Reserved (unused)	Reserved	Uint32			NA	NA	NA

Tab. B1-B: Operative variables (Part B)

L[#]	Address	Description	ModBus Register Name	Type	Max.	Min.	Unit	PGN	SPN
64	528	Generator Phase A-B (U-V) Line-Line AC RMS Voltage	See Appendix D - Table D3	Uint16	64255	0	[V]	65027	2441
65	530	Generator Phase A (U) Line-Neutral AC RMS Voltage	See Appendix D - Table D3	Uint16	64255	0	[V]	65027	2445
66	532	Generator Phase A (U) AC Frequency	Generator_Phase_A_U_AC_Frequency	Uint16	64255	0	Hz/128	65027	2437
67	534	Generator Phase A (U) AC RMS Current	Generator_Phase_A_U_AC_RMS_Current	Uint16	64255	0	[A]	65027	2449
68	536	Generator Phase B-C (V-W) Line-Line AC RMS Voltage	See Appendix D - Table D3	Uint16	64255	0	[V]	65024	2442
69	538	Generator Phase B (V) Line-Neutral AC RMS Voltage	See Appendix D - Table D3	Uint16	64255	0	[V]	65024	2446
70	540	Generator Phase B (V) AC Frequency	Generator_Phase_B_V_AC_Frequency	Uint16	64255	0	Hz/128	65027	2437
71	542	Generator Phase B (V) AC RMS Current	Not Available (0xFFFF fixed)	Uint16	64255	0	[A]	65024	2450
72	544	Generator Phase C-A (W-U) Line-Line AC RMS Voltage	See Appendix D - Table D3	Uint16	64255	0	[V]	65021	2443
73	546	Generator Phase C (W) Line-Neutral AC RMS Voltage	See Appendix D - Table D3	Uint16	64255	0	[V]	65021	2447
74	548	Generator Phase C (W) AC Frequency	Generator_Phase_C_W_AC_Frequency	Uint16	64255	0	Hz/128	65027	2437
75	550	Generator Phase C (W) AC RMS Current	Not Available (0xFFFF fixed)	Uint16	64255	0	[A]	65021	2451
76	552	Generator Excitation Field Voltage	Generator_Excitation_Field_Voltage	Uint16	64255	0	V/20-1606	64934	3380
77	554	Reserved (unused)	Reserved	Uint16	64255	0	[A/20]	64934	3381
78	556	Reserved (unused)	Reserved	Uint16	64255	0		64934	3382
79	558	Free for future use (unused)	-	Uint16	64255	0		-	-
80	560	Generator Average Line-Line AC RMS Voltage	See Appendix D - Table D3	Uint16	64255	0	[V]	65030	2440
81	562	Generator Average Line-Neutral AC RMS Voltage	See Appendix D - Table D3	Uint16	64255	0	[V]	65030	2444
82	564	Generator Average AC RMS Frequency	Generator_Average_AC_RMS_Frequency	Uint16	64255	0	[Hz/128]	65030	2436
83	566	Generator Average AC RMS Current	Not Available (0xFFFF fixed)	Uint16	64255	0	[A]	65030	2448
84	568	Free for future use	-	Uint16	64255	0	-	65287	-
85	570	Generator Auxiliary AC RMS Voltage	Generator_Auxiliary_AC _RMS_Voltage(4)	Uint16	64255	0	[V]	65287	520220
86	572	Generator Auxiliary AC Frequency	Generator_Auxiliary_AC _Frequency(4)	Uint16	64255	0	[Hz/128]	65287	520219
87	574	Free for future use (unused)	-	Uint16	64255	0	-	65287	-
88	576	Reserved (unused)	Reserved	Uint16	64255	0	[V]	65003	2509
89	578	Reserved (unused)	Reserved	Uint16	64255	0	[V]	65003	2513
90	580	Reserved (unused)	Reserved	Uint16	64255	0	[Hz/128]	65003	2505
91	582	Free for future use (unused)	-	Uint16				-	-
92	584	Reserved (unused)	Reserved	Uint16				65000	25xx[12]
93	586	Reserved (unused)	Reserved	Uint16				65000	2516
94	588	Free for future use (unused)	-	Uint16				-	-
95	590	Free for future use (unused)	-	Uint16				-	-
96	592	Free for future use (unused)	-	Uint16				-	-
97	594	Generator Phase A (U) Power Factor	Generator_Phase_A_U_Power_Factor	Uint16				65025	2465
98	596	Generator Phase A (U) Power Factor Lagging(6)	Generator_Phase_A_U_Power_Factor_Lagging	Uint16				65025	2519
99	598	Free for future use (unused)	-	Uint16				-	-
100	600	Free for future use (unused)	-	Uint16				-	-
101	602	Generator Total Power Factor	Generator_Total_Power_Factor	Uint16				65028	2464
102	604	Generator Total Power Factor Lagging(6)	Generator_Total_Power_Factor_Lagging	Uint16				65028	2518
103	606	Free for future use (unused)	-	Uint16				-	-
104..107	608..614	Free for future use (unused)	-					-	-
108..113	616..626	Reserved (unused)	Reserved	Uint8	255	0	[°C]	-	-
114..115	628..630	Free for future use (unused)		Uint8				-	-
116..119	632..638	Free for future use						-	-
120	640	Generator Phase A (U) Real Power	Generator_Phase_A_U_Real_Power	Uint32				65026	2453
121	642	Generator Phase A (U) Apparent Power	Generator_Phase_A_U_Apparent_Power	Uint32				65026	2461
122	644	Generator Phase A (U) Reactive Power	Generator_Phase_A_U_Reactive_Power	Uint32				65025	2457
123	646	Generator Total Real Power	Generator_Total_Real_Power	Uint32				65029	2452
124	648	Generator Total Apparent Power	Generator_Total_Apparent_Power	Uint32				65029	2460
125	650	Generator Total Reactive Power	Generator_Total_Reactive_Power	Uint32				65028	2456
126	652	Free for future use (unused)							
127	654	Free for future use (unused)							

Tab. B2: Operative variables to publish on CAN J1939 standard messages

ANNEX C: Configuration Flags(3)

64 Configuration Flags are mapped on 32 bits of parameter P[35] and on 32 bits of parameter P[36] (address 70 and 71)

Nr.	Bit	Flag Name	Flag description	Default	Default value
1	B_0	Free_35-0	Free for future use (unused)	ND	0
2	B_1	Trim1_En	TRIMMER VOLT Enable	Active	1
3	B_2	Trim2_En	TRIMMER DROOP Enable	Active	1
4	B_3	Trim3_En	TRIMMER STAB Enable	Active	1
5	B_4	Trim4_En	TRIMMER AMP Enable	Active	1
6	B_5	VExt_En	External Voltage Enable	Active	1
7	B_6	Free_35-6	Free for future use (unused)	ND	0
8	B_7	JP_Freq1_En	50/60 Switch Enable	Active	1
9	B_8	Reserved	Reserved (unused)	Not active	0
10	B_9	Reserved	Reserved (unused)	ND	0
11	B_{10}	JP_LAM_En	LAM Switch Enable	Active	1
12	B_{11}	JP_Droop_En	Droop Switch Enable	Active	1
13	B_{12}	JP_Autotuning_En	Autotuning Switch Enable	Active	1
14	B_{13}	Free_35-13	Free for future use (unused)	ND	0
15	B_{14}	APO_Inversion	APO inversion	Active	1
16	B_{15}	Reserved	Reserved (unused)	Not active	0
17	B_{16}	Free_35-16	Free for future use (unused)	ND	0
18	B_{17}	Free_35-17	Free for future use (unused)	ND	0
19	B_{18}	HDR_En	HDR Enable	ND(10)	0/1
20	B_{19}	Amp_Ctrl_En	Over Excitation Protection Enable	Active	1
21	B_{20}	SCC_Dtctn_En	Short Circuit Detection Enable	Active	1
22	B_{21}	Free_35_21	Free for future use (unused)	ND	0
23	B_{22}	60Hz	50/60 Hz setting (60Hz activation)	Not active	0
24	B_{23}	Reserved	Reserved (unused)	Not active	0
25	B_{24}	Reserved	Reserved (unused)	ND	0
26	B_{25}	LAMS	V/f operating mode or LAMS	V/f	0
27	B_{26}	Droop_En	Droop activation	Not active	0
28	B_{27}	Reserved-35-27	Reserved (Not used)	Not Active	0
29	B_{28}	Autotuning	Autotuning activation	Autotuning	1
30	B_{29}	Free_35-29	Free for future use (unused)	ND	0
31	B_{30}	Free_35-30	Free for future use (unused)	ND	0
32	B_{31}	CAN_Proprietary	CAN proprietary messages	Active	1

Tab. C1: Configuration Flags Part 1 - Parameter P[35] **CONFIGURATION_1**

Nr.	Bit	Flag Name	Flag description	Default	Default value
1	B_0	Free_36-0	Free for future use (unused)	ND	0
2	B_1	ATUNEonce	Autotuning to execute once	Once	0
3	B_2	ATUNEdone	Autotuning executed at least one time	Not executed	0
4	B_3	ATUNEfreeze	Automatic Freeze Autotuning	Active	1
5	B_4	Free_36-4	Free for future use	Active	1
6	B_5	Free_36-5	Free for future use (unused)	ND	0
7	B_6				
8	B_7				
9	B_8				
10	B_9	Free_36-9	Free for future use (unused)	ND	0
11	B_{10}	Free_36-10	Free for future use (unused)	ND	0
12	B_{11}	Sensing_gain	Sensing Scale (55-150V) or (150-405V)	(150-405V)	1
13	B_{12}	Sensing_winding	Sensing winding (Half phase or Full phase)	Full phase	1
14	B_{13}	Sensing_source	Sensing Line-to-Neutral or Line-to-Line	L-N	0
15..22	B_{14}.. B_{21}	Reserved	Reserved (unused)	Not active	0 (All)
23	B_{22}	Free_36-22	Free for future use (unused)	ND	0
24..26	B_{23}.. B_{25}	Reserved	Reserved (unused)	Low level	0 (All)
27..32	B_{26}.. B_{31}	Free_36-26.. Free_36-31	Free for future use	ND	0 (All)

Tab. C2: Configuration Flags Part 2 - Parameter P[36] **CONFIGURATION_2**

ANNEX D: SPN Values calculation

D1: Voltage values calculation

According to the configuration of the flags #4, #5 and #6 of the operative variable L[35] **STATUS** (address 470 , Bit B_3, B_4 and B_5 respectively[(11)]), the voltage measurement variables #13, #14, #15, #16, #49, #50, #51 and #52 (**float** format in RAM ModBus Area), converted to the appropriate values if significant, otherwise assuming fixed value 65535 ($FFFF_{16}$), are used to update almost in real-time the variables #64, #65, #68, #69, #72, #73, #80 and #81 (**uint** format in RAM CANBus Area) intended to be published on the proper CAN J1939 Message SPN (Table D1).

J1939 VARIABLES RAM AREA (CANBus) **L[64]÷L[127] A[528]÷A[654]**			L[#]	64	65	68	69	72	73	80	81
			Address	528	530	536	538	544	546	560	562
			Description	Generator Phase A-B (U-V) L-L AC RMS Voltage	Generator Phase A (U) L-N AC RMS Voltage	Generator Phase B-C (V-W) L-L AC RMS Voltage	Generator Phase B (V) L-N AC RMS Voltage	Generator Phase C-A (W-U) L-L AC RMS Voltage	Generator Phase C (W) L-N AC RMS Voltage	Generator Average L-L AC RMS Voltage	Generator Average L-N AC RMS Voltage
OPERATIVE VARIABLE (ModBus area) **L[35] A[470] STATUS**[17]			Operative Variable Register Name	Generator_Phase_A_B_U_V_Line_Line_AC_RMS_Voltage	Generator_Phase_A_U_Line_Neutral_AC_RMS_Voltage	Generator_Phase_B_C_V_W_Line_Line_AC_RMS_Voltage	Generator_Phase_B_V_Line_Neutral_AC_RMS_Voltage	Generator_Phase_C_A_W_U_Line_Line_AC_RMS_Voltage	Generator_Phase_C_W_Line_Neutral_AC_RMS_Voltage	Generator_Average_Line_Line_AC_RMS_Voltage	Generator_Average_Line_Neutral_AC_RMS_Voltage
B_3	B_4	B_5	**PGN**	65027	65027	65024	65024	65021	65021	65030	65030
U	V	W	**SPN**	2441	2445	2442	2446	2443	2447	2440	2444
1	1	1	Source variable or value	L[50]	L[14]	L[51]	L[15]	L[52]	L[16]	L[49]	L[13]
				A[500]	A[428]	A[502]	A[430]	A[504]	A[432]	A[498]	A[426]
				VuVv_CnctVltg	PU_VltgRMS	VvVw_CnctVltg	PV_VltgRMS	VwVu_CnctVltg	PW_VltgRMS	AVG_CnctVltg	MEC_Snsng VltgRMS
1	1	0	Source variable or value	L[50]	L[14]	-	L[15]	-	-	L[50]	13
				A[500]	A[428]	-	A[430]	-	-	A[500]	426
				VuVv_CnctVltg	PU_VltgRMS	65535	PV_VltgRMS	65535	65535	VuVv_CnctVltg	MEC_Snsng VltgRMS
1	0	1	Source variable or value	-	L[14]	-	-	L[52]	L[16]	L[52]	L[13]
				-	A[428]	-	-	A[504]	A[432]	A[504]	A[426]
				65535	PU_VltgRMS	65535	65535	VwVu_CnctVltg	PW_VltgRMS	VwVu_CnctVltg	MEC_Snsng VltgRMS
1	0	0	Source variable or value	-	L[14]	-	-	-	-	-	L[13]
				-	A[428]	-	-	-	-	-	A[426]
				65535	PU_VltgRMS	65535	65535	65535	65535	65535	MEC_Snsng VltgRMS
0	1	1	Source variable or value	-	-	L[51]	L[15]	-	L[16]	L[51]	L[13]
				-	-	A[502]	A[430]	-	A[432]	A[502]	A[426]
				65535	65535	VvVw_CnctVltg	PV_VltgRMS	65535	PW_VltgRMS	VvVw_CnctVltg	MEC_Snsng VltgRMS
0	1	0	Source variable or value	-	-	-	L[15]	-	-	-	L[13]
				-	-	-	A[430]	-	-	-	A[426]
				65535	65535	65535	PV_VltgRMS	65535	65535	65535	MEC_Snsng VltgRMS
0	0	1	Source variable or value	-	-	-	-	-	L[16]	-	L[13]
				-	-	-	-	-	A[432]	-	A[426]
				65535	65535	65535	65535	65535	PW_VltgRMS	65535	MEC_Snsng VltgRMS
0	0	0	Fixed value	65535	65535	65535	65535	65535	65535	65535	65535

Tab. D1: correspondence between variables as used in the code and variables to be used for SPN values calculation

According to the configuration of the flags #12, #13 and #14 of the parameter P [36] (**CONFIGURATION 2**), (Bit B_{11}, B_{12} and B_{13} respectively) the values to be published on the CANBus (Table D3) are obtained from the variables #64, #65, #68, #69, #72, #73, #80 and #81 (CANBus operative variables, Table D1).

Table D2 exemplifies the configuration of the flags in some of the possible cases of sensing wiring on alternators connected in star series (S) or parallel star (SS) with the different possible voltages of the individual machine windings; the other foreseen wiring cases, series delta (D) and parallel delta (DD) are similar to the star series (S) or parallel star (SS) line-line sensing (some case is represented at the bottom of table), the zig-zag case is similar to star series (S) full phase sensing; in the case of single-phase sensing of three-phase and single-phase machines, only the values referred to the effective sensing gets meaning.

Sensing configuration examples for star series connections at rated voltages V_{L-N}=220÷400V V_{L-L}=380÷690V	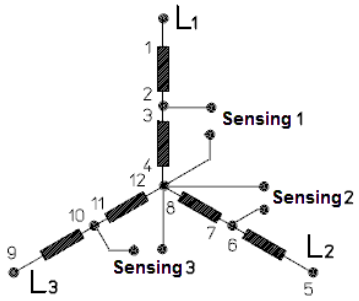 *3-phase L to N - half phase*		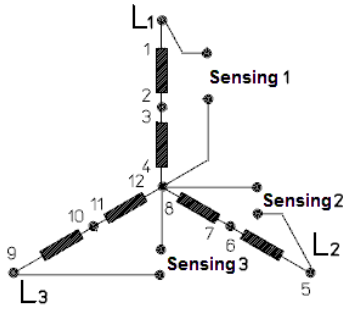 *3-phase L to N - full phase*		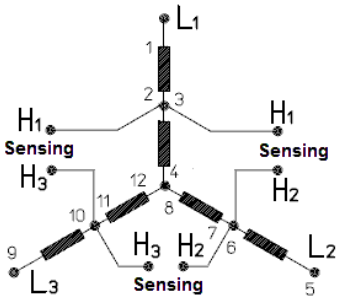 *3-phase L to L - half phase*	
Flags	SS=0	SW=0	SS=0	SW=1	SS=1	SW=0
Sensing Voltage [V]	110÷144 (55÷150)	SG=0	220÷400 (150÷405)	SG=1	190÷345 (150÷405)	SG=1
Output Voltage [V]	V_{L-N}=220÷289V - V_{L-L}=380÷500V		V_{L-N}=220÷400V - V_{L-L}=380÷690V		V_{L-N}=220÷400V - V_{L-L}=380÷690V	
MEC_SnsngVltgRMS	300,6÷393,5V	K_{MEC}=2*Ratio_G	220÷400V	K_{MEC}=1	190÷345V	K_{MEC}=2
Sensing configuration examples for parallel star connections at rated voltages V_{L-N}=110÷400V V_{L-L}=190÷690V	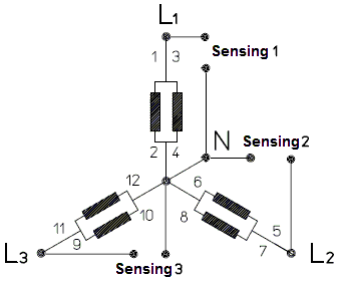 *3-phase L to N - full phase*		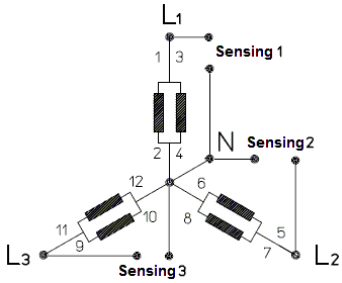 *3-phase L to N - full phase*		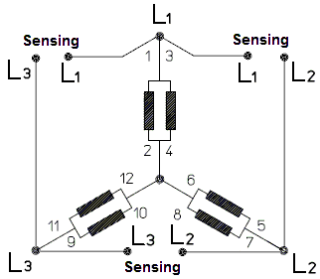 *3-phase L to L - full phase*	
Flags	SS=0	SW=1	SS=0	SW=1	SS=1	SW=1
Sensing Voltage [V]	110÷144 (55÷150)	SG=0	220÷400 (150÷405)	SG=1	173÷400 (150÷405)	SG=1
Output Voltage [V]	V_{L-N}=110÷144V - V_{L-L}=190÷250V		V_{L-N}=220÷400V - V_{L-L}=380÷690V		V_{L-N}=110÷231V - V_{L-L}=190÷400V	
MEC_SnsngVltgRMS	300,6÷393,5V	K_{MEC}=Ratio_G	220÷400V	K_{MEC}=1	173÷400V	K_{MEC}=1
Sensing configuration examples for delta connections at rated voltages V_{L-L}=190÷690V	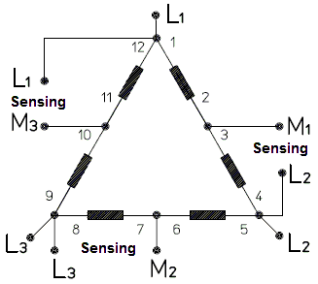 *3-phase L to L - half phase*		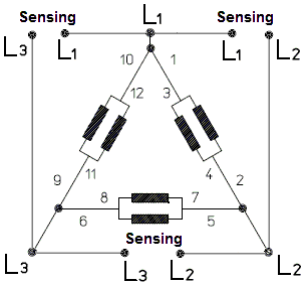 *3-phase L to L - full phase*		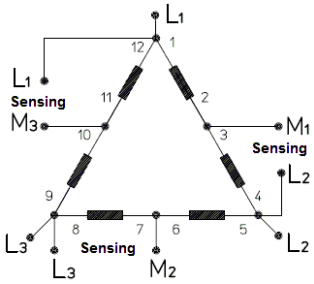 *3-phase L to L - half phase*	
Flags	SS=1	SW=0	SS=1	SW=1	SS=1	SW=0
Sensing Voltage [V]	95÷125 (55÷150)	SG=0	173÷400 (150÷405)	SG=1	190÷345 (150÷405)	SG=1
Output Voltage [V]	V_{L-L}=190÷250V		V_{L-L}=190÷400V		V_{L-L}=380÷690V	
MEC_SnsngVltgRMS	259,6÷341,6V	K_{MEC}=2*Ratio_G	190÷400V	K_{MEC}=1	190÷345V	K_{MEC}=2

Tab. D2: Configuration of the voltage conversion flags based on some typical connections of windings and sensing

Based on the hardware structure, the following constant values may be considered:

Ratio_G = 1 / 2,733 = 0,3659

PGN	SPN	Description	RAM	Source variable	U.M.	Range	SS	SW	SG	SPN Value
65030	2440	Generator Average Line-Line AC RMS Voltage	L[81]	Generator_**Average_ Line_Neutral**_ AC_RMS_Voltage	[V]	Uint	1	1	1	Average_Line_Neutral
							1	1	0	Average_Line_Neutral*Ratio_G
							1	0	1	Average_Line_Neutral*2
							1	0	0	Average_Line_Neutral*2*Ratio_G
			L[80]	Generator_**Average_ Line_Line**_ AC_RMS_Voltage	[V]	Uint	0	1	1	Average_Line_Line
							0	1	0	Average_Line_Line*Ratio_G
							0	0	1	Average_Line_Line*2
							0	0	0	Average_Line_Line*2*Ratio_G
65030	2444	Generator Average Line-Neutral AC RMS Voltage	-	**NOT AVAILABLE**	[V]	Uint	1	1	1	65535 (FFFF$_{16}$)
							1	1	0	65535 (FFFF$_{16}$)
							1	0	1	65535 (FFFF$_{16}$)
							1	0	0	65535 (FFFF$_{16}$)
			L[81]	Generator_**Average_ Line_Neutral**_ AC_RMS_Voltage	[V]	Uint	0	1	1	Average_Line_Neutral
							0	1	0	Average_Line_Neutral*Ratio_G
							0	0	1	Average_Line_Neutral*2
							0	0	0	Average_Line_Neutral*2*Ratio_G
65027	2441	Generator Phase A-B (U-V) Line-Line AC RMS Voltage	L[65]	Generator_**Phase_ A_U_Line_Neutral**_ AC_RMS_Voltage	[V]	Uint	1	1	1	Phase_A_U_Line_Neutral
							1	1	0	Phase_A_U_Line_Neutral *Ratio_G
							1	0	1	Phase_A_U_Line_Neutral*2
							1	0	0	Phase_A_U_Line_Neutral*2*Ratio_G
			L[64]	Generator_Phase_ **A_B_U_V_Line_Line**_ AC_RMS_Voltage	[V]	Uint	0	1	1	A_B_U_V_Line_Line
							0	1	0	A_B_U_V_Line_Line*Ratio_G
							0	0	1	A_B_U_V_Line_Line*2
							0	0	0	A_B_U_V_Line_Line*2*Ratio_G
65027	2445	Generator Phase A (U) Line-Neutral AC RMS Voltage	-	**NOT AVAILABLE**	[V]	Uint	1	1	1	65535 (FFFF$_{16}$)
							1	1	0	65535 (FFFF$_{16}$)
							1	0	1	65535 (FFFF$_{16}$)
							1	0	0	65535 (FFFF$_{16}$)
			L[65]	Generator_**Phase_ A_U_Line_Neutral**_ AC_RMS_Voltage	[V]	Uint	0	1	1	Phase_A_U_Line_Neutral
							0	1	0	Phase_A_U_Line_Neutral *Ratio_G
							0	0	1	Phase_A_U_Line_Neutral*2
							0	0	0	Phase_A_U_Line_Neutral*2*Ratio_G
65024	2442	Generator Phase B-C (V-W) Line-Line AC RMS Voltage	L[69]	Generator_**Phase_ B_V_Line_Neutral**_ AC_RMS_Voltage	[V]	Uint	1	1	1	Phase_B_V_Line_Neutral
							1	1	0	Phase_B_V_Line_Neutral*Ratio_G
							1	0	1	Phase_B_V_Line_Neutral*2
							1	0	0	Phase_B_V_Line_Neutral*2*Ratio_G
			L[68]	Generator_Phase_ **B_C_V_W_Line_Line**_ AC_RMS_Voltage	[V]	Uint	0	1	1	B_C_V_W_Line_Line
							0	1	0	B_C_V_W_Line_Line*Ratio_G
							0	0	1	B_C_V_W_Line_Line*2
							0	0	0	B_C_V_W_Line_Line*2*Ratio_G
65024	2446	Generator Phase B (V) Line-Neutral AC RMS Voltage	-	**NOT AVAILABLE**	[V]	Uint	1	1	1	65535 (FFFF$_{16}$)
							1	1	0	65535 (FFFF$_{16}$)
							1	0	1	65535 (FFFF$_{16}$)
							1	0	0	65535 (FFFF$_{16}$)
			L[69]	Generator_**Phase_ B_V_Line_Neutral**_ AC_RMS_Voltage	[V]	Uint	0	1	1	Phase_B_V_Line_Neutral
							0	1	0	Phase_B_V_Line_Neutral*Ratio_G
							0	0	1	Phase_B_V_Line_Neutral*2
							0	0	0	Phase_B_V_Line_Neutral*2*Ratio_G
65021	2443	L[72] Generator Phase C-A (W-U) Line-Line AC RMS Voltage	L[73]	Generator_**Phase_ C_W_Line_Neutral**_ AC_RMS_Voltage	[V]	Uint	1	1	1	Phase_C_W_Line_Neutral
							1	1	0	Phase_C_W_Line_Neutral*Ratio_G
							1	0	1	Phase_C_W_Line_Neutral*2
							1	0	0	Phase_C_W_Line_Neutral*2*Ratio_G
			L[72]	Generator_Phase_ **C_A_W_U_Line_Line**_ AC_RMS_Voltage	[V]	Uint	0	1	1	C_A_W_U_Line_Line
							0	1	0	C_A_W_U_Line_Line*Ratio_G
							0	0	1	C_A_W_U_Line_Line*2
							0	0	0	C_A_W_U_Line_Line*2*Ratio_G
65021	2447	L[73] Generator Phase C (W) Line-Neutral AC RMS Voltage	-	**NOT AVAILABLE**	[V]	Uint	1	1	1	65535 (FFFF$_{16}$)
							1	1	0	65535 (FFFF$_{16}$)
							1	0	1	65535 (FFFF$_{16}$)
							1	0	0	65535 (FFFF$_{16}$)
			L[73]	Generator_**Phase_ C_W_Line_Neutral**_ AC_RMS_Voltage	[V]	Uint	0	1	1	Phase_C_W_Line_Neutral
							0	1	0	Phase_C_W_Line_Neutral*Ratio_G
							0	0	1	Phase_C_W_Line_Neutral*2
							0	0	0	Phase_C_W_Line_Neutral*2*Ratio_G

Tab. D3: Main variables needed to the voltage measurements management

D2: Current values calculation

The value of the alternator current used by the algorithm is expressed in p.u. ([0; 5,5A] equivalent to [0; 1,1] where 5A is the rated current.
If the alternator rated current [I_R] is lower than the C.T. rated current [I_1], compensation is made by increasing the gain of the current channel so that the current to the C.T. secondary winding corresponding to the alternator rated current [I_2(@I_1=I_R)<5A] to be read as unitary.
P[55] (**`CT_RATIO`**, E^2PROM address 110) is the additional parameter related to the C.T. conversion ratio.
P[25] (**`CURR_CANSclng`**, E^2PROM address 50) has got the function of scaling the alternator rated current
L[24] (**`PU_CurrRMS`**, RAM address 448), expresses the current in p.u. (range 0÷5,5A, rated value 5A)
Then L[24] = I_2[pu] = I_2[A]*P[25] where I_2 is the current flowing on the secondary winding of the C.T
According to the value of the parameters P[55] (**`CT_RATIO`**) and P[25] (**`CURR_CANSclng`**), from the current measurement variable (#24, **`single`** format), converted to the appropriate values (**`uint`** format, Table D4), the values to be transmitted on CAN are obtained (Table D5)

OPERATIVE VARIABLES (32 Bit) - RAM AREA A[400]÷A[526]						J1939 VARIABLES - RAM AREA 64÷127					
#	Add.	ModBus Register Name	Description	type	U.M.	#	Add.	CAN variable	type	U.M.	Range
24	448	`PU_CurrRMS`	Channel 1 current	Float	[A]	67	534	`Generator_Phase_A_U_AC_RMS_Current`	Uint	[A]	0÷64255

Tab. D4: correspondence between variable as used in the code and variable to be used for SPN values calculation

J1939 variable become

L[67] = P[55] * **I_2[A] =** P[55] * L[24] / P[25]

`Generator_Phase_A_U_AC_RMS_Current = CT_RATIO` * **I_2[A] = `CT_RATIO * PUcurrRMS / CURR_CANSclng`**

J1939 RAM Location	Source variable	U.M.	Range	SPN Value	PGN	SPN
L[67] A[534] Generator Phase A (U) AC RMS Current	L[24] A[448] **`PU_CurrRMS`**	[A]	0÷5,5	**`Generator_Phase_A_U_AC_RMS_Current`**	65027	2449
L[71] A[542] Generator Phase B (V) AC RMS Current	Not Available	NA	NA	65535	65024	2450
L[75] L[550] Generator Phase C (W) AC RMS Current	Not Available	NA	NA	65535	65021	2451
L[83] L[566] Generator Average AC RMS Current	Not Available	NA	NA	65535	65030	2448

Tab. D5: Main variables needed to the current measurements management

ANNEX E: M2KS M3KS M3KS-HD CAN J1939 PGN65226 DM1 based on L[36] A[472] ALARM

NOTES AND FAILURE MODE SEVERITY LEVEL →							MOST	MODER.	LEAST	LEAST	MODER.	MOST	LAMPS Byte1 B_6÷B_3 00=OFF 01=ON	
L[36] A[472] ALARM				FMI SOURCE DATA		SPN # Byte 3,4, 5 (3 msb)	BELOW			ABOVE				
#	bit	Mnem.	Alarm description	A[#]	Source variable		FMI=1	FMI=18	FMI=17	FMI=15	FMI=16	FMI=0	RSL	AWL
1	0	A0	Not used by definition	-	-		NA - Note 15						00	00
2	1	CS	Checksum EEprom	-	-	-	FMI=13						01	00
3	2	LOS	Reserved (not active)	426	Reserved	2444* 2440*	L.O.S. Detected	NA	NA	NA	NA	NA	01	00
4	3	RBDS	Reserved (not implemented)				NA						01	00
5	4	RBDF	Reserved (not implemented)				NA						00	01
6	5	OV	Over voltage (@ ω_N)	426 424	MEC_SnsngVltgRMS TVS_SnsgnVltgSetpt	2444* 2440*	NA	NA	NA	O.V. Detected	NA	NA	00	01
7	6	UV	Under voltage (@ ω_N)	426 424	MEC_SnsngVltgRMS TVS_SnsgnVltgSetpt	2444* 2440*	NA	NA	U.V. Detected	NA	NA	NA	00	01
8	7	SC	Short circuit	426	MEC_SnsngVltgRMS	2444* 2440*	NA	Short Detected	NA	NA	NA	NA	00	01
9	8	OEXC	Over Excitation (Exc. Over Current)	436 490	avgExcVltg EXC_RefDsrdVltg	3380	NA	NA	NA	L[18]/L[45] 100÷110%	L[18]/L[45] > 110%	NA	00	01
10	9	UEXC	Under Excitation (Low Exc. Current)	NA 106	EXC_DsrdVltg_V_vlsf32 U_EXC_THRESHOLD	3380	NA	V_{EXC}/P[46] < 60%	V_{EXC}/P[46] 60÷100%	NA	NA	NA	00	01
11	10	SOV	Supply Over Voltage	NA	(Internal)	520220	Source variable compared with 450V fixed threshold; proprietary SPN for Vaux published on proprietary PGN65287					Supply O.V. Detected	00	01
12	11	OC	Phase (U) Over current	448	PU_CurrRMS	2449	NA	NA	NA	5,0÷5,5A	> 5,5A	NA	00	01
13	12	OL	Reserved (not active)				NA						00	01
14	13	US	Under Speed	440	AF2P_Freq	2436	NA	<80%	80÷100%	NA	NA	NA	00	01
15	14	OS	Over Speed	440	AF2P_Freq	2436	NA	NA	NA	100÷120%	> 120%	NA	00	01
16	15	A15	Free for future use	-	-								00	00
17	16	OTR	AVR Over Temp. (85°C)	508	CDSR_Temperature	520208	PGN65283 STATUS (12-P)			NA	NA	> 85°C	01	00
18	17	LTR	AVR Max. Temp. (70°C)	508	CDSR_Temperature	520208	PGN65283 STATUS (12-O)			70÷75°C	> 75°C	NA	00	01
19	18	OTU	Reserved (not implemented)				NA						00	01
20	19	OTV	Reserved (not implemented)				NA						00	01
21	20	OTW	Reserved (not implemented)				NA						00	01
22	21	OTDE	Reserved (not implemented)				NA						00	01
23	22	OTNDE	Reserved (not implemented)				NA						00	01
24	23	A23	Free for future use	-	-								00	00
25	24	PS	Reserved (not active)	506	Reserved	TBD	NA						00	01
26	25	CL	Capacitive Load	462	LAE_CosPhi(x9)	2465	<0,95	0,95÷1	NA				00	00
27	26	ERRVM	Reserved (not implemented)				NA - ST-CDSR_J1939 Note 2, 6						00	00
28	27	NP	Negative Power	460	PU_ActPwr(x8)	2453	NA	NA	NA	NA	-5%÷0	< -5%	00	00
29	28	OOR	Reserved (not implemented)				NA -Advanced AVR version						00	00
30	29	FPSW	Reserved (not implemented)				NA -Advanced AVR version						00	01
31	30	UQ	Reserved (not implemented)				NA -Advanced AVR version						00	00
32	31	A31	Free for future use	-	-								00	00

NOTE*: Published SPN based on P[36] A[72] CONFIGURATION_2 bit 13 (SS): if SS=1 SPN=2440; else SS=0 SPN=2444

NOTES

1. PGN 65226 (DM1) could do not fit within the 8 bytes payload of standard CAN messages however the **MxKS** implementation doesn't use the BAM and the CM segmentation methods, ref. §5.5 *Active Diagnostic Troubles Codes DM1*
2. Configurable parameter P[126] A[252] **`CAN_address`**
3. Subject to modifications and/or extension
4. Shaded text highlights PGNs, SPNs, parameters, variables or single bits not active (unused), reserved or which implementation has been planned but currently non available yet
5. Configurable parameter P[125] (address 250): **`CAN_Broadcast`**
6. Ref. SAE J1939-75 SPN 2518 - GENERATOR OVERALL POWER FACTOR LAGGING (PGN 65,028) and SPN 2519 - GENERATOR PHASE A POWER FACTOR LAGGING (PGN 65,025)
   a. 2 bit representation
   b. 00 - Leading
   c. 01 - Lagging
   d. 10 - Error
7. Vext configurable range (0÷2,5V, 0÷5V, 0÷10V compliant to Vext Ratings (±10V)
8. Apparent power is an unsigned quantity, Real power must be signed since power may flow in both directions. Reactive power is a signed quantity, like real power. Negative values indicate reverse power flow. - ref. SAE J1939-75, § 3 "Definitions"
9. Cosφ is the cosine of the angle between voltage and current for the single phase U. It's used as approximation of AC Power Factor (measuring the ratio of real power to apparent power). The range is -1.0 to +1.0. Negative values indicate reverse power flow. A value of 1.0 indicates that all of the power flow is real power delivered to the load (i.e. a purely resistive load). A value of 0.0 indicates that no real power is delivered to the load (i.e. a purely reactive load).Power factor can be leading (a capacitive load) or lagging (an inductive load). This is not indicated by the sign of the power factor, but by a separate flag.
10. **M2KS**and **M3KS**: **`HDR_En = 0`** (HDR not present); **M3KS-HD** **`HDR_En = 1`** by default.
11. Bit B_3, B_4 and B_5 of L[35] A[470] **`STATUS`** takes their respective values from internal binary variables **`MEC_SnsngFlags[…]`**, **`MEC_SnsngFlags[…]+1`**, **`MEC_SnsngFlags[…]+2`**
12. (xx=27..30), Couple of bits B_9-B_8.. B_1-B_0 reserved for SPN 2529, 2530, 2526, 2528, 2527

REVISION HISTORY

Revision	Date	Description
00	01/03/2024	First Emission